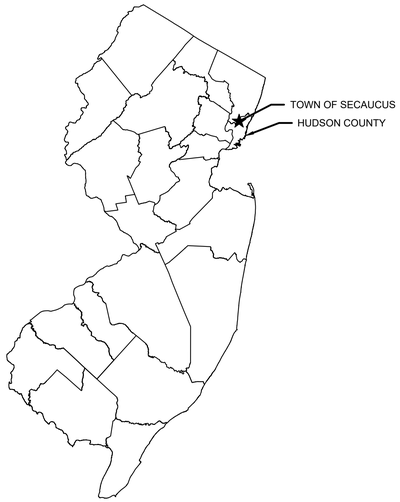

STATE OF NEW JERSEY

FARM ROAD PARK

BLOCK 203 LOTS 41, 42, & 43

TOWN OF SECAUCUS

HUDSON COUNTY, New Jersey

TOWN OF SECAUCUS

MAYOR
MICHAEL GONNELLI

COUNCIL MEMBERS
JAMES J. CLANCY, SR.
ROBERT COSTANTINO
MARK DEHNERT
JOHN GERBASIO
WILLIAM MCKEEVER
ORIETTA TRINGALI

TOWN CLERK
MICHAEL MARRA

TOWN ADMINISTRATOR
GARY JEFFAS, ESQ.

TOWN ATTORNEY
KERI ANN EGLENTOWICZ, ESQ.

TOWN ENGINEER
JENNIFER MODI, P.E.

PUBLIC UTILITIES LIST	
CABLE	COMCAST
ELECTRICITY	PUBLIC SERVICE ELECTRIC & GAS COMPANY
GAS	PUBLIC SERVICE ELECTRIC & GAS COMPANY
SEWERS	SECAUCUS MUNICIPAL UTILITIES AUTHORITY
TELEPHONE	VERIZON
WATER	SUEZ WATER OF NEW JERSEY

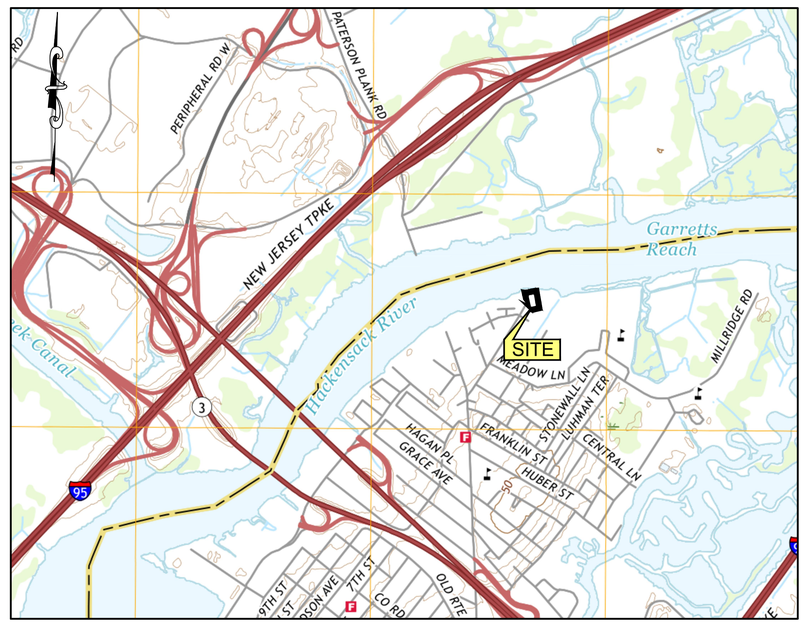

PROJECT LOCATION MAP
1" = 1000'

INDEX OF SHEETS	
SHEET NO.	DESCRIPTION
1	TITLE SHEET
2	EXISTING CONDITIONS PLANS
3	SITE PLAN
4	GRADING AND DRAINAGE PLAN
5	LIGHTING PLAN
6	LIGHTING DETAILS
7	SOIL EROSION AND SEDIMENT CONTROL PLAN
8	SOIL EROSION AND SEDIMENT CONTROL DETAILS
9	CROSS SECTION PLAN
10	DETAIL SHEET - 1
11	DETAIL SHEET - 2
12	DETAIL SHEET - 3
13	DETAIL SHEET - 4

FUNDING SOURCE

THIS PROJECT IS FUNDED BY THE TOWN OF SECAUCUS

BOSWELL ENGINEERING
330 PHILLIPS AVENUE
SOUTH HACKENSACK, NEW JERSEY 07606
Tel (201) 641-0770 . Fax (201) 641-1831
NJ Certificate of Authorization No. 24GA27958000

STEPHEN T. BOSWELL
PROFESSIONAL ENGINEER N.J. LIC. 34680

JOSEPH A. POMANTE
PROFESSIONAL ENGINEER N.J. LIC. 43137
Digitally signed by Joseph A. Pomante
Date: 2022.03.14 16:16:50 -04'00'

JOB NO. SEC-155

MARCH 7, 2022

SEC-155-TS

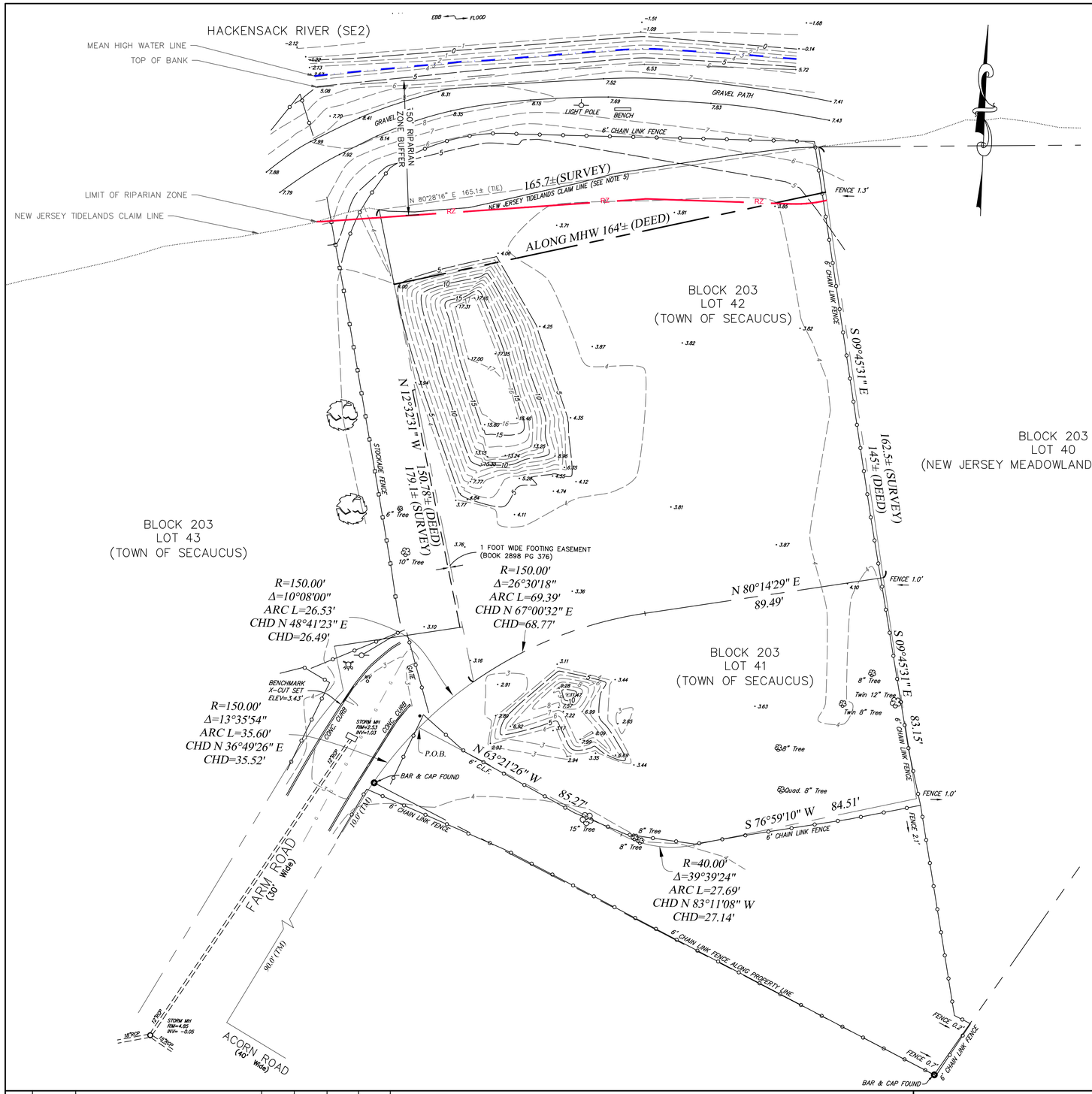

LEGEND:

- TOP OF BANK
- MEAN HIGH WATER LINE
- LIMIT OF 50' RIPARIAN ZONE
- PROPERTY LINE
- EXISTING CONTOUR LINES

PLAN NOTES:

1. BASEMAP REFERENCES SURVEY PERFORMED BY BOSWELL ENGINEERING.
2. BEARINGS SHOWN HEREON ARE BASED ON THE NORTH AMERICAN DATUM OF 1983.
3. ELEVATIONS SHOWN HEREON ARE BASED ON NAVD 1988. REFERENCE MONUMENT: L 62 (PID KV0462)..TO CONVERT FROM NAVD 88 TO NGVD 29, ADD 1.056 FEET.
4. UNDERGROUND UTILITIES IF DEPICTED ARE BASED ON VISIBLE EVIDENCE. THE LACK OF UTILITY INFORMATION DOES NOT DENY THE EXISTENCE OF SAME. REFERENCE TO THE APPROPRIATE UTILITY AUTHORITY SHOULD BE MADE TO VERIFY THE PRESENCE OR ABSENCE OF UTILITIES PRIOR TO ANY EXCAVATION.
5. THE TIDELANDS CLAIM LINE IS BASED UPON NEW JERSEY DEPARTMENT OF ENVIRONMENTAL PROTECTION GEOGRAPHIC INFORMATION SYSTEM DIGITAL DATA, BUT THIS SECONDARY PRODUCT HAS NOT BEEN VERIFIED BY NJDEP AND IS NOT STATE AUTHORIZED.
6. PRESENT MEAN HIGH WATER LINE IS BASED UPON MEADOWLANDS ENVIRONMENTAL RESEARCH INSTITUTE TIDE GAUGE STATION 9 (MILL CREEK) DATA. MEAN HIGH WATER LINE IS AT ELEVATION 2.86
7. THE ENTIRETY OF THE PROPERTY IS WITHIN THE FLOOD HAZARD AREA OF THE HACKENSACK RIVER, AS PER FEMA FIRM PANEL 266 OF 332, MAP NUMBER 34003C0266H.
8. THE ENTIRETY OF THE PROJECT FALLS WITHIN THE 500' WATERFRONT DEVELOPMENT AREA.

GRAPHIC SCALE

20 0 10 20 40 80

(IN FEET)
1 inch = 20 feet

NO.	DATE	DESCRIPTION	SURVEYED BY	DRAWN BY	DESIGNED BY	CHECKED BY

PLOT BY: SELWYN JOY PLOT DATE: 3/11/2022

BOSWELL ENGINEERING
EST. 1924
ENGINEERS – SURVEYORS – PLANNERS – SCIENTISTS
330 PHILLIPS AVENUE, SOUTH HACKENSACK, N.J. 07606
TEL: (201) 641–0770 • FAX: (201) 641–1831
N.J. CERTIFICATE OF AUTHORIZATION No. 24GA27958000

STEPHEN T. BOSWELL
PROFESSIONAL ENGINEER N.J. LIC. 34680

JOSEPH A. POMANTE
Digitally signed by Joseph A. Pomante
Date: 2022.03.14 16:17:30 -04'00'
PROFESSIONAL ENGINEER N.J. LIC. 43137

FARM ROAD PARK
BLOCK 203 LOTS 41, 42, & 43
EXISTING CONDITIONS PLANS
TOWN OF SECAUCUS

HUDSON COUNTY NEW JERSEY

SURVEYED BY: --	DESIGNED BY: S.J.	SCALE: 1" = 20'	JOB NO. SEC–155	DATE: 3/07/22
DRAWN BY: S.J.	CHECKED BY: F.J.R.			

CADD FILE: SEC–155–ES.DWG SHEET 2 OF 13

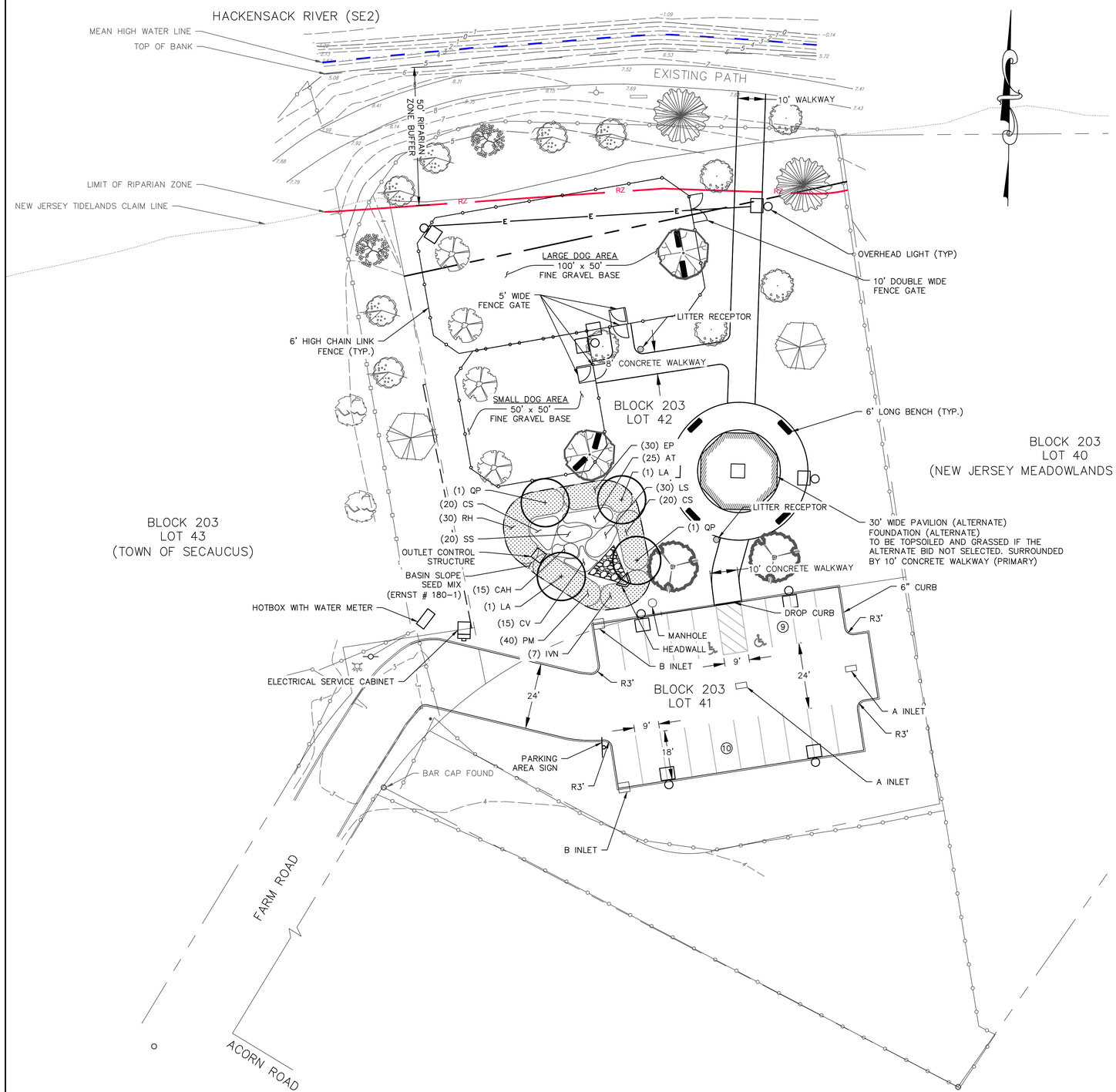

LEGEND:

- TOP OF BANK
- MEAN HIGH WATER LINE
- LIMIT OF 50' RIPARIAN ZONE
- PROPERTY LINE
- FENCE

PLANTING SCHEDULE

SYMBOL	QUANTITY	COMMON NAME	SIZE
	4	EASTERN REDBUD	2.5–3" CALIPER
	2	OCTOBER GLORY RED MAPLE	3–3.5" CALIPER
	6	PINK DOGWOOD	2.5–3" CALIPER
	2		3–3.5" CALIPER
	2	RIVER BIRCH ~~RED OAK~~	3–3.5" CALIPER
	2	WEEPING WILLOW	3–3.5" CALIPER
	5	WHITE DOGWOOD	2.5–3" CALIPER
	2	WINTER KING HAWTHORNE	2.5–3" CALIPER

BIORETENTION BASIN PLANTINGS

KEY	QUANTITIY	BOTANICAL NAME	COMMON NAME	SIZE
LA	2	*Liquidambar styraciflua*	SWEETGUM	2.5 - 3" CALIPER
QP	2	*Quercus phellos*	WILLOW OAK	2.5 - 3" CALIPER
CAH	15	*Clethra alnifolia 'Hummingbird'*	HUMMINGBIRD SUMMERSWEET	24"-30" HT.
CS	40	*Cornus sericea 'Kelseyi'*	DWARF RED-OSIER DOGWOOD	24"-30" HT.
IVN	7	*Ilex verticillata 'Nana'*	RED SPRITE WINTERBERRY HOLLY	24"-30" HT.
AT	25	*Asclepias tuberosa*	BUTTERFLY MILKWEED	1 GAL
EP	30	*Echinacea purpurea*	PURPLE CONEFLOWER	1 GAL
LS	30	*Liatris spicata*	DENSE BLAZING STAR	1 GAL
PM	40	*Pycnanthemum muticum*	MOUNTAIN MINT	1 GAL
RH	30	*Rudbeckia hirta*	BLACKEYED SUSAN	1 GAL
CV	15	*Carex vulpinoidea*	FOX SEDGE	1 GAL
SS	20	*Schizachyrium scoparium*	LITTLE BLUESTEM	1 GAL

PRINCIPAL BID

ITEM	TO BE CONSTRUCTED	UNIT	QUANTITY
5	CLEAN FILL	C.Y.	3,030
6	6' TALL FENCE	L.F.	430
7	FENCE GATE	UNIT	4
8	DOG PARK GRAVEL BASE	S.Y.	810
9	WALKWAYS	S.Y.	430
10	ASPHALT AREA (DRIVEWAY AND PARKING LOT)	S.Y.	820
11	CONCRETE CURB	L.F.	460
12	PARKING STRIPING AND MARKINGS	L.S	––
20	BIORETENTION BASIN	L.S	––
22	BENCHES	UNIT	8
24	ADA SIGNS	UNIT	2
25	SCREENED TOPSOIL, 5" THICK	C.Y.	600
26	PLANTINGS	L.S	––
27	SEED AND FERTILIZER	S.Y	4,170
28	DEMARCATION LAYER	S.Y	5,000
29	PARKING AREA SIGN	UNIT	1
30	LITTER RECEPTOR	UNIT	2

ALTERNATE BID

ITEM	TO BE CONSTRUCTED	UNIT	QUANTITY
31	30' PAVILION	L.S.	L.S.
32	PAVILION FOUNDATION	S.F.	707

PLAN NOTES:

1. BASEMAP REFERENCES SURVEY PERFORMED BY BOSWELL ENGINEERING.
2. BEARINGS SHOWN HEREON ARE BASED ON THE NORTH AMERICAN DATUM OF 1983.
3. ELEVATIONS SHOWN HEREON ARE BASED ON NAVD 1988. REFERENCE MONUMENT: L 62 (PID KV0462)..TO CONVERT FROM NAVD 88 TO NGVD 29, ADD 1.056 FEET.
4. UNDERGROUND UTILITIES IF DEPICTED ARE BASED ON VISIBLE EVIDENCE. THE LACK OF UTILITY INFORMATION DOES NOT DENY THE EXISTENCE OF SAME. REFERENCE TO THE APPROPRIATE UTILITY AUTHORITY SHOULD BE MADE TO VERIFY THE PRESENCE OR ABSENCE OF UTILITIES PRIOR TO ANY EXCAVATION.
5. THE TIDELANDS CLAIM LINE IS BASED UPON NEW JERSEY DEPARTMENT OF ENVIRONMENTAL PROTECTION GEOGRAPHIC INFORMATION SYSTEM DIGITAL DATA, BUT THIS SECONDARY PRODUCT HAS NOT BEEN VERIFIED BY NJDEP AND IS NOT STATE AUTHORIZED.
6. PRESENT MEAN HIGH WATER LINE IS BASED UPON MEADOWLANDS ENVIRONMENTAL RESEARCH INSTITUTE TIDE GAUGE STATION 9 (MILL CREEK) DATA. MEAN HIGH WATER LINE IS AT ELEVATION 2.86
7. THE ENTIRETY OF THE PROPERTY IS WITHIN THE FLOOD HAZARD AREA OF THE HACKENSACK RIVER, AS PER FEMA FIRM PANEL 266 OF 332, MAP NUMBER 34003C0266H.
8. THE ENTIRETY OF THE PROJECT FALLS WITHIN THE 500' WATERFRONT DEVELOPMENT AREA.
9. BASIN SLOPE SEED MIX REFERS TO ERNMX–180–1
10. THE PAVILION SELECTED IS BASED ON THE "30' CEDAR OCTAGON GAZEBO" BY "GAZEBOCREATIONS.COM" (ITEM # [COG3000]) IN RED CEDAR, WITH A SINGLE ROOF, 30' SIZE, OCTAGON SHAPE, AND NO DECK. IT IS THE CONTRACTOR'S RESPONSIBILITY TO PURCHASE AND CONSTRUCT THE SPECIFIED PAVILION. THE PAVILION WILL BE SECURED TO A CONCRETE SLAB AS SPECIFIED IN THE CONTRACT DRAWINGS. THE PAVILION WILL BE SECURED AS PER MANUFACTURERS SPECIFICATIONS. IF THE ALTERNATE BID IS NOT SELECTED, THE AREA IT TO BE TOPSOILED AND SEEDED WITH GRASS.

GRAPHIC SCALE

20 0 10 20 40 80

(IN FEET)
1 inch = 20 feet

NO.	DATE	DESCRIPTION	SURVEYED BY	DRAWN BY	DESIGNED BY	CHECKED BY

PLOT BY: SELWYN JOY PLOT DATE: 3/11/2022

BOSWELL ENGINEERING
EST. 1924
ENGINEERS – SURVEYORS – PLANNERS – SCIENTISTS
330 PHILLIPS AVENUE, SOUTH HACKENSACK, N.J. 07606
TEL: (201) 641–0770 • FAX: (201) 641–1831
N.J. CERTIFICATE OF AUTHORIZATION No. 24GA27958000

STEPHEN T. BOSWELL
PROFESSIONAL ENGINEER N.J. LIC. 34680

JOSEPH A. POMANTE
Digitally signed by Joseph A. Pomante
Date: 2022.03.14 16:17:54 -04'00'
PROFESSIONAL ENGINEER N.J. LIC. 43137

FARM ROAD PARK
BLOCK 203 LOTS 41, 42, & 43
SITE PLAN
TOWN OF SECAUCUS
HUDSON COUNTY NEW JERSEY

SURVEYED BY: –– DRAWN BY: S.J. | DESIGNED BY: S.J. CHECKED BY: F.J.R. | SCALE: 1" = 20' | JOB NO. SEC–155 | DATE: 3/07/22

CADD FILE: SEC–155–CP.DWG SHEET 3 OF 13

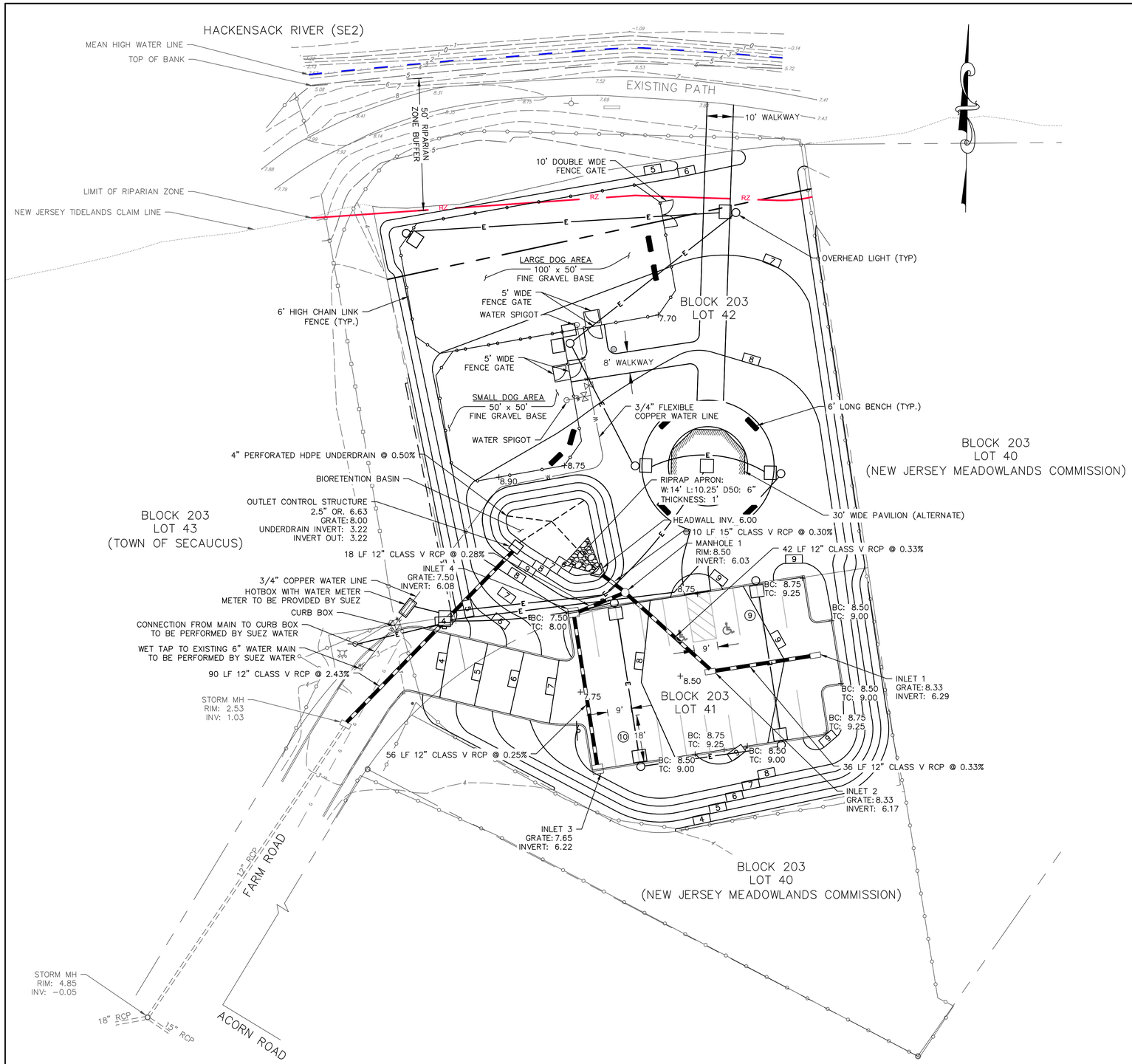

LEGEND:

- TOP OF BANK
- MEAN HIGH WATER LINE
- LIMIT OF 50' RIPARIAN ZONE
- PROPERTY LINE
- EXISTING CONTOUR LINES
- PROPOSED CONTOUR LINES
- FENCE
- WATER LINE

PRINCIPAL BID

ITEM	TO BE CONSTRUCTED	UNIT	QUANTITY
13	INLETS	UNIT	4
14	MANHOLE	UNIT	1
15	CONCRETE HEADWALL	UNIT	1
16	12" REINFORCED CONCRETE PIPE	L.F	250
17	15" REINFORCED CONCRETE PIPE	L.F.	10
18	RIPRAP APRON 12" THICK	S.Y.	10
19	OUTLET CONTROL STRUCTURE	UNIT	1
23	WATER SERVICE SUPPLY	L.S.	L.S.

PLAN NOTES:

1. BASEMAP REFERENCES SURVEY PERFORMED BY BOSWELL ENGINEERING.
2. BEARINGS SHOWN HEREON ARE BASED ON THE NORTH AMERICAN DATUM OF 1983.
3. ELEVATIONS SHOWN HEREON ARE BASED ON NAVD 1988. REFERENCE MONUMENT: L 62 (PID KV0462)..TO CONVERT FROM NAVD 88 TO NGVD 29, ADD 1.056 FEET.
4. UNDERGROUND UTILITIES IF DEPICTED ARE BASED ON VISIBLE EVIDENCE. THE LACK OF UTILITY INFORMATION DOES NOT DENY THE EXISTENCE OF SAME. REFERENCE TO THE APPROPRIATE UTILITY AUTHORITY SHOULD BE MADE TO VERIFY THE PRESENCE OR ABSENCE OF UTILITIES PRIOR TO ANY EXCAVATION.
5. THE TIDELANDS CLAIM LINE IS BASED UPON NEW JERSEY DEPARTMENT OF ENVIRONMENTAL PROTECTION GEOGRAPHIC INFORMATION SYSTEM DIGITAL DATA, BUT THIS SECONDARY PRODUCT HAS NOT BEEN VERIFIED BY NJDEP AND IS NOT STATE AUTHORIZED.
6. PRESENT MEAN HIGH WATER LINE IS BASED UPON MEADOWLANDS ENVIRONMENTAL RESEARCH INSTITUTE TIDE GAUGE STATION 9 (MILL CREEK) DATA. MEAN HIGH WATER LINE IS AT ELEVATION 2.86
7. THE ENTIRETY OF THE PROPERTY IS WITHIN THE FLOOD HAZARD AREA OF THE HACKENSACK RIVER, AS PER FEMA FIRM PANEL 266 OF 332, MAP NUMBER 34003C0266H.
8. THE ENTIRETY OF THE PROJECT FALLS WITHIN THE 500' WATERFRONT DEVELOPMENT AREA.

GRAPHIC SCALE

20 0 10 20 40 80

(IN FEET)
1 inch = 20 feet

NO.	DATE	DESCRIPTION	SURVEYED BY	DRAWN BY	DESIGNED BY	CHECKED BY

PLOT BY:SELWYN JOY PLOT DATE:3/11/2022

BOSWELL ENGINEERING
EST. 1924
ENGINEERS – SURVEYORS – PLANNERS – SCIENTISTS
330 PHILLIPS AVENUE, SOUTH HACKENSACK, N.J. 07606
TEL: (201) 641–0770 • FAX: (201) 641–1831
N.J. CERTIFICATE OF AUTHORIZATION No. 24GA27958000

STEPHEN T. BOSWELL
PROFESSIONAL ENGINEER N.J. LIC. 34680

JOSEPH A. POMANTE
Digitally signed by Joseph A. Pomante
Date: 2022.03.14 16:18:20 -04'00'
PROFESSIONAL ENGINEER N.J. LIC. 43137

FARM ROAD PARK
BLOCK 203 LOTS 41, 42, & 43
GRADING AND DRAINAGE PLAN
TOWN OF SECAUCUS
HUDSON COUNTY NEW JERSEY

SURVEYED BY:-- DRAWN BY: S.J.	DESIGNED BY:S.J. CHECKED BY: F.J.R.	SCALE: 1" = 20'	JOB NO. SEC-155	DATE: 3/07/22

CADD FILE: SEC–155–GDP.DWG SHEET 4 OF 13

FIXTURE SCHEDULE									
LABEL	TYPE	MANUFACTURER	CATALOG #	VOLTAGE	WATTS	LUMENS	TEMP (K)	QUANTITY	NOTES
A	FIXTURE	LITHONIA LIGHTING	DSX1 LED P2 40K BLC MVOLT SPA PER5 DBLXD	120–277	70	7,293	40K	3	LED AREA LUMINAIRE FOR WALKWAYS AND FUTURE GAZEBO WITH PHOTOCELL[1] AND BLACK FINISH
B	FIXTURE	LITHONIA LIGHTING	DSX1 LED P2 40K T4M MVOLT SPA PER5 DBLXD	120–277	70	8,708	40K	2	LED AREA LUMINAIRE FOR PARKING LOT WITH PHOTOCELL[1] AND BLACK FINISH
B1	FIXTURE	LITHONIA LIGHTING	DSX1 LED P2 40K T4M MVOLT SPA PER5 HS DBLXD	120–277	70	8,708	40K	2	LED AREA LUMINAIRE FOR PARKING LOT WITH PHOTOCELL[1], HOUSE–SIDE SHIELD AND BLACK FINISH
C	FIXTURE	LITHONIA LIGHTING	DSX1 LED P2 40K T5W MVOLT SPA PER5 DBLXD	120–277	70	9,175	40K	2	LED AREA LUMINAIRE FOR DOG PARKS WITH PHOTOCELL[1] AND BLACK FINISH
P1	POLE	LITHONIA LIGHTING	SSA 14–6 4C DM19AS DBLXD	–	–	–	–	7	14'–6" BLACK FINISH ALUMINUM POLES FOR SINGLE MOUNT FIXTURES
P2	POLE	LITHONIA LIGHTING	SSA 14–6 4C DM29AS DBLXD	–	–	–	–	1	14'–6" BLACK FINISH ALUMINUM POLES FOR DUAL MOUNTED T5W FIXTURES AT 90°

FIXTURE SCHEDULE NOTES:

1. CONTRACTOR TO SUPPLY TWIST–LOCK PHOTOCELL PER LIGHT FIXTURE.

EQUIPMENT SCHEDULE							
MANUFACTURER	CATALOG #	VOLTAGE	PHASE	KW	AMPS	QUANTITY	NOTES
SQUARE D	QO612L100DF	120/240	1	–	100	1	NEMA 1 MAIN LUG LOAD CENTER MAX 6 TANDEM BREAKERS
APX	TCPE401615	–	–	–	–	1	NEMA 3R MINIMUM RATED ELECTRIC CABINET W/ KEY LOCKABLE DOOR
INTERMATIC	T103 DPST	120	–	–	40	1	24–HOUR MECHANICAL TIME SWITCH
QUAZITE	PC1212Z80117	–	–	–	–	1	PRE–CAST POLYMER CONCRETE UNDERGROUND ELECTRICAL BOX
HUBBELL	HF026070055	–	–	–	–	1	WATER METER ENCLOSURE

GENERAL NOTES:

1. A NEW 100A 120/240V 1ϕ SERVICE SHALL BE INSTALLED AT FARM ROAD PARK. CONTRACTOR SHALL FURNISH AND INSTALL A NEW ELECTRIC SERVCE CABINET TO CONTAIN A 100A 6CKT PANEL AND MOUNT THE NEW PSE&G SERVICE METER. PRIOR TO CABINET INSTALLATION, THE CONTRACTOR SHALL COORDINATE WITH PSE&G WIRING INSPECTOR FOR FINAL LOCATION OF SERVICE METER.
2. NEW ELECTRIC SERVICE CONDUIT SHALL CONFORM TO TRENCH DETAIL AS PER PSE&G SPECIFICATIONS (SEE LIGHTING DETAILS). SERVICE CONDUIT SHALL BE SCH40 PVC WHEN INSTALLED BELOW GRADE, A RED DETECTOR TAPE MUST BE INSTALLED 12" ABOVE THE CONDUIT. SCH80 PVC IS REQUIRED AT ALL ABOVE GROUND LOCATIONS. THE UTILITY POLE RISER SHALL EXTEND 10' ABOVE FINISHED GRADE AND MUST HAVE AN EXPANSION JOINT.
3. CONTRACTOR SHALL FURNISH AND INSTALL SIX (6) LED LIGHT FIXTURES, WITH PHOTOCELLS, FED FROM THE NEW PARK POWER PANEL: PP.
4. CONTRACTOR SHALL PLACE TWO (2) 1" SPARE CONDUIT FROM THE ELECTRICAL SERVICE CABINET EXTENDING TO THE QUAZITE BOX FOR FUTURE USE. REFER TO ENVIRONMENTAL PLAN TO ENSURE CONDUIT DOES NOT PASS THROUGH BIORETENTION BASIN.
5. ALL NEWLY INSTALLED WIRE SHALL BE XHHW–2 COPPER.
6. ALL WORK SHALL BE DONE IN ACCORDANCE WITH THE 2017 NATIONAL ELECTRIC CODE (NEC).

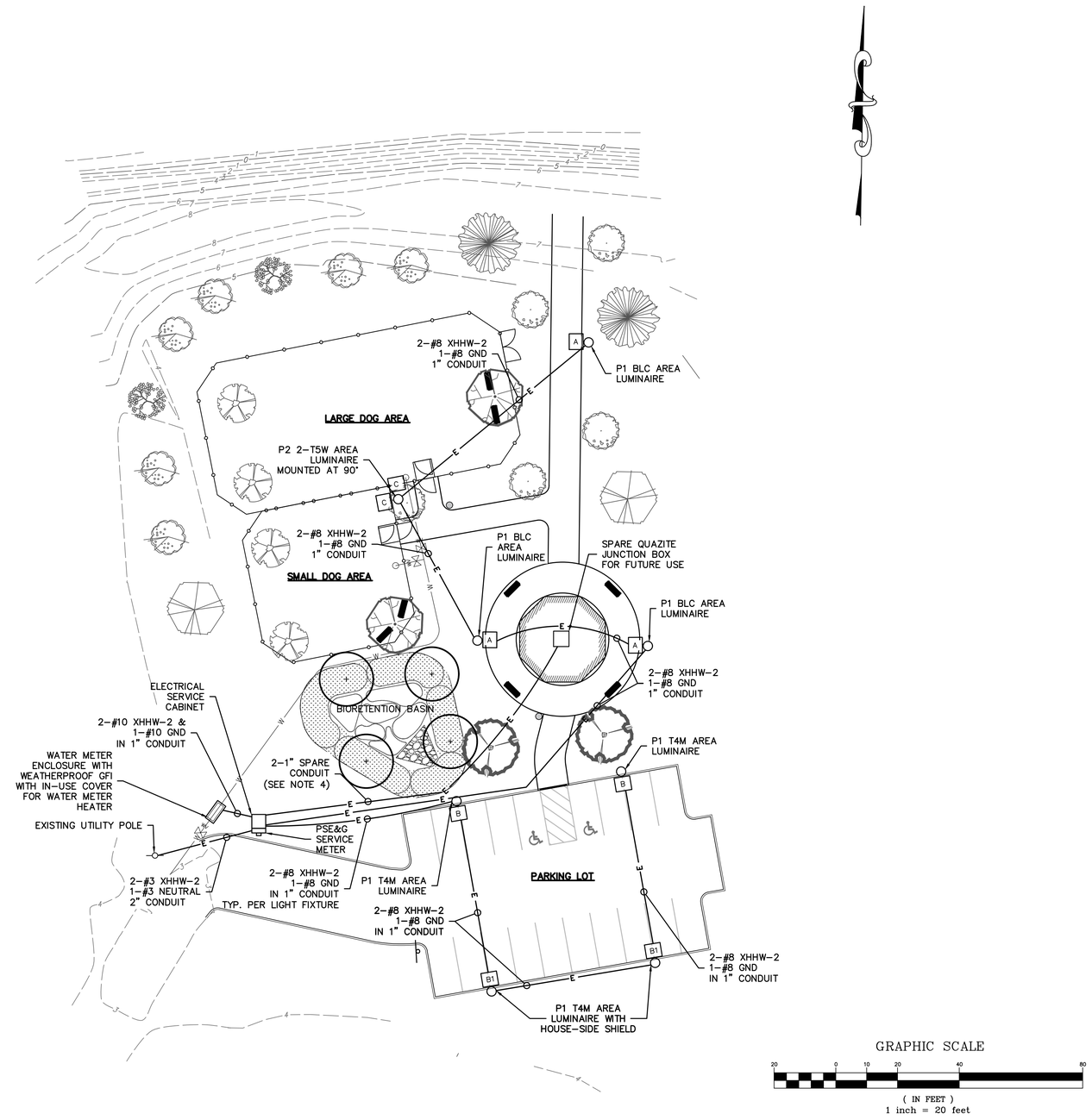

GRAPHIC SCALE

20 0 10 20 40 80

(IN FEET)
1 inch = 20 feet

NO.	DATE	DESCRIPTION	SURVEYED BY	DRAWN BY	DESIGNED BY	CHECKED BY

PLOT BY: SELWYN JOY PLOT DATE: 3/11/2022

BOSWELL ENGINEERING
EST. 1924
ENGINEERS – SURVEYORS – PLANNERS – SCIENTISTS
330 PHILLIPS AVENUE, SOUTH HACKENSACK, N.J. 07606
TEL: (201) 641–0770 • FAX: (201) 641–1831
N.J. CERTIFICATE OF AUTHORIZATION No. 24GA27958000

JOSEPH A. POMANTE
Digitally signed by Joseph A. Pomante
Date: 2022.03.14 16:18:47 -04'00'
PROFESSIONAL ENGINEER N.J. LIC. 43137

KENNETH H. POST
PROFESSIONAL ENGINEER N.J. LIC. 42486

FARM ROAD PARK
BLOCK 203 LOTS 41, 42, & 43
LIGHTING PLAN
TOWN OF SECAUCUS
HUDSON COUNTY NEW JERSEY

SURVEYED BY: – –
DRAWN BY: S.J.
DESIGNED BY: S.J.
CHECKED BY: F.J.R.
SCALE: 1" = 20'
JOB NO. SEC–155
DATE: 3/07/22
CADD FILE: SEC 155 LP.DWG
SHEET 5 OF 13

PANEL DATA: PP

VOLTS: 120/240
PHASE, WIRE: 1ϕ, 3W
KAIC RATING: 10K
MAIN LUG: 100A

KVA
PHASE A: 0.63
PHASE B: 1.50
TOTAL: 2.13

AMPS
PHASE A: 5.25
PHASE B: 12.50

NEMA RATING: 1
BUS MATERIAL: TIN PLATED ALUMINUM
BUS AMP RATING: 100A
PER PHASE FEEDER SIZE: #3
NEUTRAL SIZE: #3

POWER PANEL: PP

CKT	TRIP	POLE	WIRE	LOAD DESCRIPTION	AMPS	KW PER ϕ ϕA	ϕB	AMPS	LOAD DESCRIPTION	WIRE	POLE	TRIP	CKT
1	20	1	#8	PARKING LOT LIGHTS	2.33	0.63		2.92	WALKWAY/PARK LIGHTS	#8	1	20	2
3	20	1	#10	WATER METER HEATER	12.5		1.50	–	–SPARE–	–	1	20	4
5	20	1	–	–SPARE–	–	–		–	–SPARE–	–	1	20	6

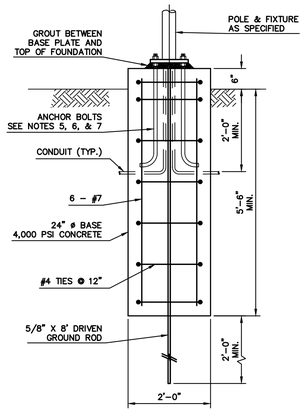

LIGHT FOUNDATION
SCALE: N.T.S.

NOTES:
1. THE LIGHT FOUNDATION HAS BEEN DESIGNED USING THE FOLLOWING PARAMETERS:
   A. THE LIGHT POLE AND FIXTURE ARE CATEGORY 2 STRUCTURES AS PER IBC.
   B. MAXIMUM 3-SECOND GUST WIND SPEED IS 115 MPH AS PER IBC.
   C. THE LIGHT POLE IS ALUMINUM WITH A MAXIMUM 6" DIAMETER AND A MAXIMUM OF 25' TALL.
   D. THE LIGHT POLE WILL SUPPORT A MAXIMUM OF 2 FIXTURES, EACH WITH A MAXIMUM WEIGHT, INCLUDING SUPPORTS AND ACCESSORIES, 25 POUNDS AND A MAXIMUM EFFECTIVE PROJECTED AREA ,EPA, OF 3.0 SQUARE FEET. EACH FIXTURE WILL BE SET A MAXIMUM OF 2' FROM THE CENTERLINE OF THE LIGHT POLE.
2. ALL ALUMINUM THAT SHALL BE IN CONTACT WITH STEEL OR CONCRETE SHALL HAVE A HEAVY COAT OF ALUMINUM PIGMENTED ALKALINE RESISTANT BITUMINOUS PAINT EQUAL TO FEDERAL SPECIFICATIONS TT-C-498C. PAINT SHALL BE APPLIED CAREFULLY AS NOT BE SHOWN ON ANY SURFACE VISIBLE WHEN THE PROJECT IS COMPLETE.
3. THE CONTRACTOR SHALL VERIFY MINIMUM SOIL PARAMETERS. SOIL SHALL BE IBC TABLE 1804.2 CLASS 4 SOIL WITH A MINIMUM LATERAL RESISTANCE OF 150 PSF/F.
4. MINIMUM COVER FOR ALL REINFORCING STEEL SHALL BE 3 INCHES.
5. ANCHOR BOLTS SHALL CONFORM TO ASTM F-593, STAINLESS STEEL TYPE 316. ANCHOR BOLT DIAMETER AND EMBEDMENT DEPTH SHALL BE AS RECOMMENDED BY THE LIGHT POLE MANUFACTURER. EMBEDMENT DEPTH SHALL BE A MINIMUM OF 18 TIMES THE ANCHOR BOLT DIAMETER.
6. ANCHOR BOLTS SHALL PROTRUDE A MINIMUM OF 4 BOLT DIAMETERS ABOVE BASE IF BASE IS LEVEL.
7. CONTRACTOR TO MATCH BOLT PATTERN AS REQUIRED FOR LIGHT ASSEMBLIES. ANCHOR BOLT CIRCLE PATTERN SHALL BE PROVIDED BY MANUFACTURER, ANCHOR BOLTS SHALL BE PROVIDED BY CONTRACTOR.
8. CONTRACTOR SHALL DUCT FILL CONDUIT ENDS AND USE SILICONE FILLED WIRE NUTS TO PREVENT WATER DAMAGE TO CONDUITS AND WIRE SPLICES

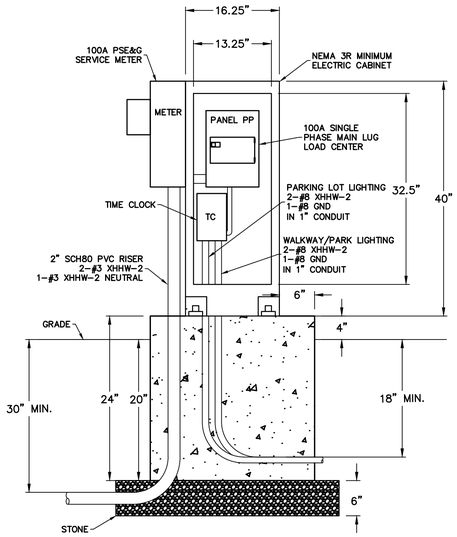

ELECTRIC CABINET DETAIL
N.T.S.

1. CONTRACTOR SHALL COORDINATE WITH PSE&G WIRING INSPECTOR FOR FINAL INSTALLATION LOCATION OF METER.
2. CONTRACTOR SHALL FURNISH AND INSTALL A MINIMUM NEMA 3R RATED ELECTRIC CABINET TO CONTAIN A 100A LOAD CENTER AND PROVIDE A MOUNTING STRUCTURE FOR THE PSE&G SERVICE METER.
3. THE CONTRACTOR SHALL VERIFY WITH THE OWNER REGARDING TIME CLOCK HOURS OF OPERATION.
4. CONTRACTOR SHALL FOLLOW MANUFACTURER PROVIDED BOLT PATTERN. DETAIL IS BASED ON APX TCPE401615 PEDESTAL CABINET.

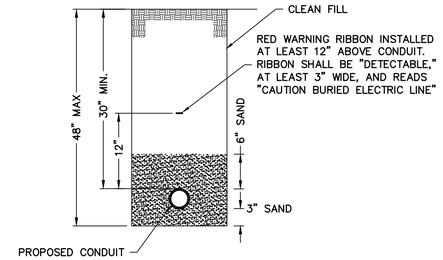

SERVICE CONDUIT TRENCH DETAIL
N.T.S.

NOTE:
1. RISER CONDUIT REQUIRED TO BE SCH80 PVC ACCORDING TO PSEG SERVICE REQUIREMENTS

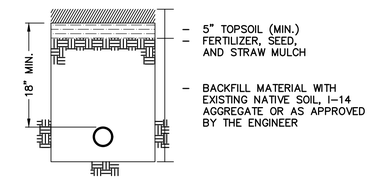

ELECTRICAL CONDUIT TRENCH (LAWN RESTORATION) DETAIL
N.T.S.

NOTE:
1. AREAS WHERE FINISHED GRADE IS SIDEWALK SHALL FOLLOW SIDEWALK DETAIL AS SHOWN IN STRUCTURAL DETAILS.

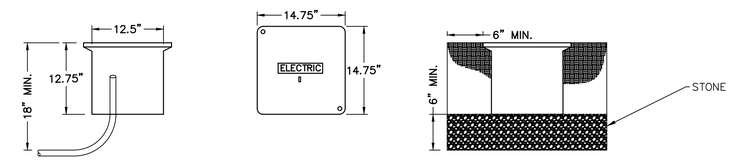

QUAZITE BOX
N.T.S.

NOTE:
1. QUAZITE BOX TO BE CONSTRUCTED OF POLYMER CONCRETE. CONTRACTOR TO SUBMIT SHOP DRAWINGS FOR ENGINEER'S APPROVAL.
2. BOX LID TO BE LEGIBLY MARKED "ELECTRIC"
3. LID TO BE OF SAME CONSTRUCTION AS BOX AND SHALL COME WITH 2 STAINLESS STEEL 3/8–16" X 1–1/2" HEX HEAD BOLTS.
4. CONTRACTOR SHALL FILL BOTTOM OF EXCAVATION WITH 6" OF SAND PRIOR TO SETTING QUAZITE BOX.

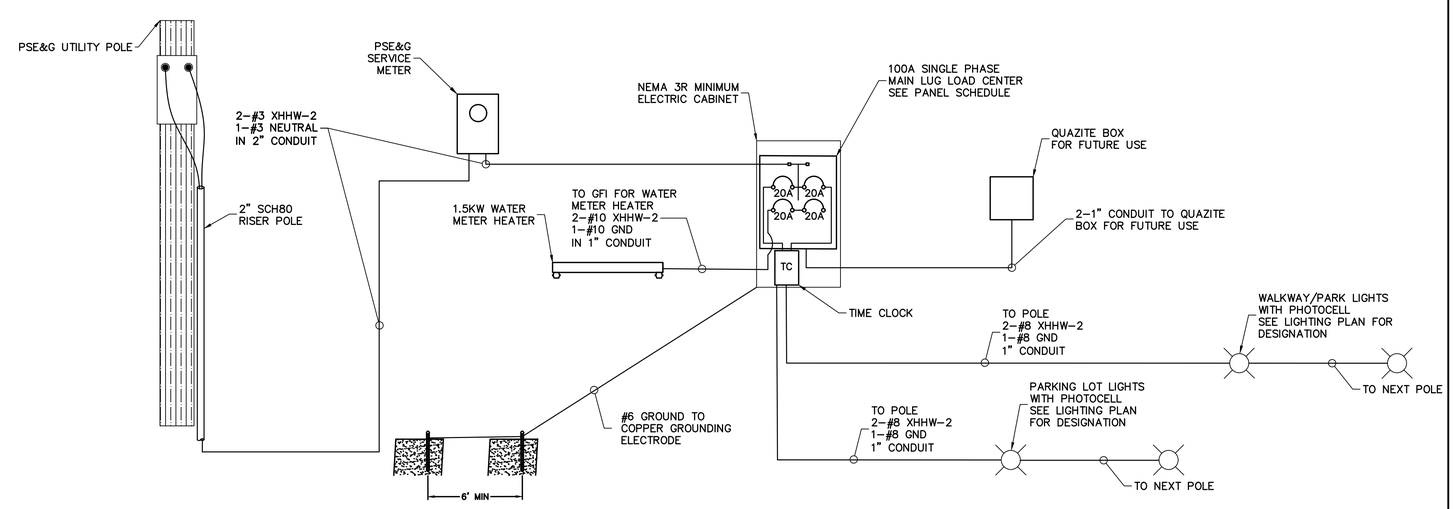

ONE–LINE DIAGRAM
N.T.S.

NOTES:
1. REFER TO LIGHTING PLAN FOR CONDUIT & LIGHT FIXTURE DESIGNATION.
2. TIME CLOCK IS TO BE CONNECTED IN SERIES WITH INDIVIDUAL PHOTOCELLS. ON/OFF TIMES TO BE DETERMINED BY OWNER.

NO.	DATE	DESCRIPTION	SURVEYED BY	DRAWN BY	DESIGNED BY	CHECKED BY

PLOT BY:SELWYN JOY PLOT DATE:3/11/2022

BOSWELL ENGINEERING
EST. 1924
ENGINEERS – SURVEYORS – PLANNERS – SCIENTISTS
330 PHILLIPS AVENUE, SOUTH HACKENSACK, N.J. 07606
TEL: (201) 641–0770 • FAX: (201) 641–1831
N.J. CERTIFICATE OF AUTHORIZATION No. 24GA27958000

JOSEPH A. POMANTE
Digitally signed by Joseph A. Pomante
Date: 2022.03.14 16:19:13 -04'00'
PROFESSIONAL ENGINEER N.J. LIC. 43137

KENNETH H. POST
PROFESSIONAL ENGINEER N.J. LIC. 42486

FARM ROAD PARK
BLOCK 203 LOTS 41, 42, & 43
LIGHTING DETAILS
TOWN OF SECAUCUS
HUDSON COUNTY NEW JERSEY

SURVEYED BY:-- DRAWN BY: S.J. | DESIGNED BY:S.J. CHECKED BY:F.J.R. | SCALE: N.T.S. | JOB NO. SEC-155 | DATE: 3/07/22

CADD FILE: SEC 155 LP.DWG SHEET 6 OF 13

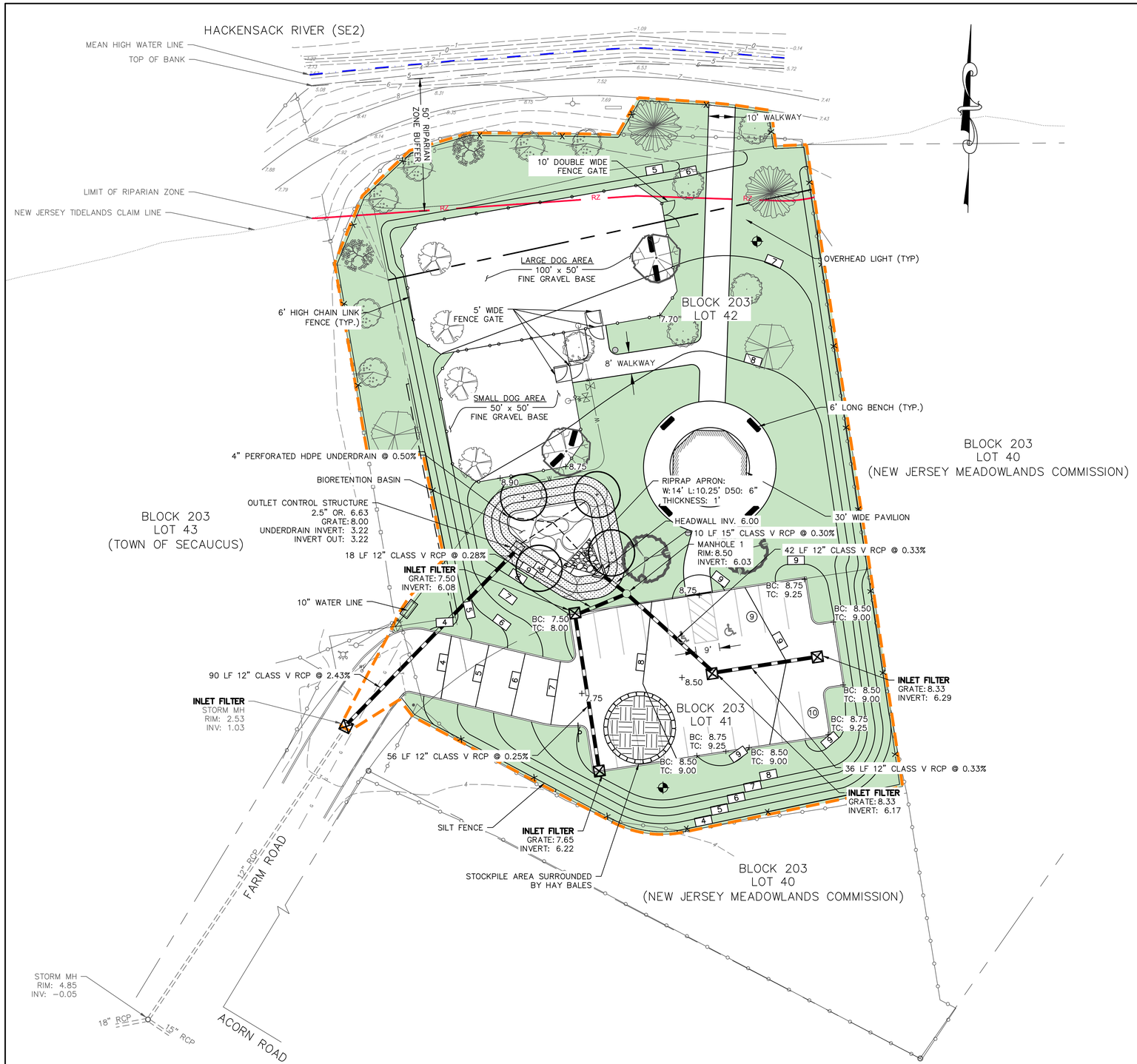

LEGEND:

- TOP OF BANK
- MEAN HIGH WATER LINE
- LIMIT OF 50' RIPARIAN ZONE
- PROPERTY LINE
- EXISTING CONTOUR LINES
- PROPOSED CONTOUR LINES
- FENCE
- WATER LINE
- LIMIT OF DISTURBANCE
- SILT FENCE
- SOIL DECOMPACTION AREA
- DECOMPACTION TESTING LOCATION

ITEM	TO BE CONSTRUCTED	UNIT	QUANTITY
1	INLET FILTER	UNIT	5
2	SILT FENCE	L.F.	840
3	HAY BALES	L.F.	85

LIMIT OF DISTURBANCE

44,953 SF (1.032 ACRES)

SOIL DECOMPACTION AREA

24,017 SF (0.551 ACRES)

PLAN NOTES:

1. BASEMAP REFERENCES SURVEY PERFORMED BY BOSWELL ENGINEERING.
2. BEARINGS SHOWN HEREON ARE BASED ON THE NORTH AMERICAN DATUM OF 1983.
3. ELEVATIONS SHOWN HEREON ARE BASED ON NAVD 1988. REFERENCE MONUMENT: L 62 (PID KV0462)..TO CONVERT FROM NAVD 88 TO NGVD 29, ADD 1.056 FEET.
4. UNDERGROUND UTILITIES IF DEPICTED ARE BASED ON VISIBLE EVIDENCE. THE LACK OF UTILITY INFORMATION DOES NOT DENY THE EXISTENCE OF SAME. REFERENCE TO THE APPROPRIATE UTILITY AUTHORITY SHOULD BE MADE TO VERIFY THE PRESENCE OR ABSENCE OF UTILITIES PRIOR TO ANY EXCAVATION.
5. THE TIDELANDS CLAIM LINE IS BASED UPON NEW JERSEY DEPARTMENT OF ENVIRONMENTAL PROTECTION GEOGRAPHIC INFORMATION SYSTEM DIGITAL DATA, BUT THIS SECONDARY PRODUCT HAS NOT BEEN VERIFIED BY NJDEP AND IS NOT STATE AUTHORIZED.
6. PRESENT MEAN HIGH WATER LINE IS BASED UPON MEADOWLANDS ENVIRONMENTAL RESEARCH INSTITUTE TIDE GAUGE STATION 9 (MILL CREEK) DATA. MEAN HIGH WATER LINE IS AT ELEVATION 2.86
7. THE ENTIRETY OF THE PROPERTY IS WITHIN THE FLOOD HAZARD AREA OF THE HACKENSACK RIVER, AS PER FEMA FIRM PANEL 266 OF 332, MAP NUMBER 34003C0266H.
8. THE ENTIRETY OF THE PROJECT FALLS WITHIN THE 500' WATERFRONT DEVELOPMENT AREA.

GRAPHIC SCALE

20 0 10 20 40 80

(IN FEET)
1 inch = 20 feet

NO.	DATE	DESCRIPTION	SURVEYED BY	DRAWN BY	DESIGNED BY	CHECKED BY

PLOT BY: SELWYN JOY PLOT DATE: 3/11/2022

BOSWELL ENGINEERING
EST. 1924
ENGINEERS – SURVEYORS – PLANNERS – SCIENTISTS
330 PHILLIPS AVENUE, SOUTH HACKENSACK, N.J. 07606
TEL: (201) 641–0770 • FAX: (201) 641–1831
N.J. CERTIFICATE OF AUTHORIZATION No. 24GA27958000

STEPHEN T. BOSWELL
PROFESSIONAL ENGINEER N.J. LIC. 34680

JOSEPH A. POMANTE
Digitally signed by Joseph A. Pomante
Date: 2022.03.14 16:19:39 -04'00'
PROFESSIONAL ENGINEER N.J. LIC. 43137

FARM ROAD PARK
BLOCK 203 LOTS 41, 42, & 43
SOIL EROSION AND SEDIMENT CONTROL PLAN
TOWN OF SECAUCUS
HUDSON COUNTY NEW JERSEY

SURVEYED BY: --	DESIGNED BY: S.J.	SCALE:	JOB NO.	DATE:
DRAWN BY: S.J.	CHECKED BY: F.J.R.	1" = 20'	SEC-155	3/07/22

CADD FILE: SEC–155–SESC.DWG SHEET 7 OF 13

SOIL EROSION NOTES

1. ALL SOIL EROSION AND SEDIMENT CONTROL PRACTICES ON THIS PLAN WILL BE CONSTRUCTED IN ACCORDANCE WITH THE "NEW JERSEY STANDARDS FOR SOIL EROSION AND SEDIMENT CONTROL" 7TH EDITION LAST REVISED DECEMBER 2017. THESE MEASURES WILL BE INSTALLED PRIOR TO ANY MAJOR SOIL DISTURBANCE OR IN THEIR PROPER SEQUENCE AND MAINTAINED UNTIL PERMANENT PROTECTION IS ESTABLISHED.
2. ALL SOIL TO BE EXPOSED OR STOCKPILED FOR A PERIOD OF GREATER THAN 14 DAYS, AND NOT UNDER ACTIVE CONSTRUCTION, WILL BE TEMPORARILY SEEDED AND HAY MULCHED OR OTHERWISE PROVIDED WITH VEGETATIVE COVER. THIS TEMPORARY COVER SHALL BE MAINTAINED UNTIL SUCH TIME WHEREBY PERMANENT RESTABILIZATION IS ESTABLISHED.
3. SEEDING DATES: THE FOLLOWING SEEDING DATES ARE BEST RECOMMENDED TO ESTABLISH PERMANENT VEGETATIVE COVER WITHIN MOST LOCATIONS IN THE HEPSCD: SPRING – 3/1 TO 5/15 AND FALL – 8/15 TO 10/01.
4. SEDIMENT FENCES ARE TO BE PROPERLY TRENCHED AND MAINTAIN UNTIL PERMANENT VEGETATIVE COVER IS ESTABLISHED.
5. ALL STORM DRAINAGE INLETS SHALL BE PROTECTED BY ONE OF THE PRACTICES ACCEPTED IN THE STANDARDS AND PROTECTION SHALL REMAIN UNTIL PERMANENT STABILIZATION HAS BEEN ESTABLISHED. STORM DRAINAGE OUTLET POINTS SHALL BE PROTECTED AS REQUIRED BEFORE THEY BECOME FUNCTIONAL.
6. MULCH MATERIALS SHALL BE UN–ROTTED SMALL GRAIN STRAW APPLIED AT THE RATE OF 70–90 POUNDS PER 1,000 SQUARE FEET AND ANCHORED WITH A MULCH ANCHORING TOOL, LIQUID MULCH BINDERS, OR NETTING TIE DOWN. OTHER SUITABLE MATERIALS MAY BE USED IF APPROVED BY THE SOIL CONSERVATION DISTRICT.
7. ALL EROSION CONTROL DEVICES SHALL BE PERIODICALLY INSPECTED, MAINTAINED AND CORRECTED BY THE CONTRACTOR. ANY DAMAGE INCURRED BY EROSION SHALL BE RECTIFIED IMMEDIATELY.
8. THE HUDSON–ESSEX–PASSAIC SOIL CONSERVATION DISTRICT WILL BE NOTIFIED IN WRITING AT LEAST 48 HOURS PRIOR TO ANY SOIL DISTURBING ACTIVITIES. FAX – (862) 333–4507, EMAIL – INFORMATION@HEPSCD.ORG.
9. THE APPLICANT MUST OBTAIN A DISTRICT ISSUED REPORT–OF–COMPLIANCE PRIOR TO APPLYING FOR THE CERTIFICATE OF OCCUPANCY OR TEMPORARY CERTIFICATE OF OCCUPANCY FROM THE RESPECTIVE MUNICIPALITY, NJ–DCA OR ANY OTHER CONTROLLING AGENCY. CONTACT THE DISTRICT AT 862–333–4505 TO REQUEST A FINAL INSPECTION, GIVING ADVANCED NOTICE UPON COMPLETION OF THE RESTABILIZATION MEASURES. A PERFORMANCE DEPOSIT MAY BE POSTED WITH THE DISTRICT WHEN WINTER WEATHER OR SNOW COVER PROHIBITS THE PROPER APPLICATION OF SEED, MULCH, FERTILIZER OR HYDRO–SEED.
10. PAVED ROADWAYS MUST BE KEPT CLEAN AT ALL TIMES. DO NOT UTILIZE A FIRE OR GARDEN HOSE TO CLEAN ROADS UNLESS THE RUNOFF IS DIRECTED TO A PROPERLY DESIGNATED AND FUNCTIONING SEDIMENT BASIN. WATER PUMPED OUT OF THE EXCAVATED AREAS CONTAINS SEDIMENTS THAT MUST BE REMOVED PRIOR TO DISCHARGING TO RECEIVING BODIES OF WATER USING REMOVABLE PUMPING STATIONS, SUMP PITS, PORTABLE SEDIMENTATION TANKS AND/OR SILT CONTROL BAGS.
11. ALL SURFACES HAVING LAWN OR LANDSCAPING AS FINAL COVER ARE TO BE PROVIDED TOPSOIL PRIOR TO RE–SEEDING, SODDING OR PLANTING. A DEPTH OF 5.0 INCHES, FIRMED IN PLACE, IS REQUIRED, AS PER THE STANDARDS FOR TOPSOILING AND LAND GRADING, LAST REVISED DECEMBER, 2017.
12. ALL PLAN REVISIONS MUST BE SUBMITTED TO THE DISTRICT FOR PROPER REVIEW AND APPROVAL.
13. A CRUSHED STONE WHEEL CLEANING TRACKING–PAD IS TO BE INSTALLED AT ALL SITE EXITS USING 2–1/2 – 1" CRUSHED ANGULAR STONE (ASTM 2 OR 3) TO A MINIMUM LENGTH OF 50 FEET AND MINIMUM DEPTH OF 6". ALL DRIVEWAYS MUST BE PROVIDED WITH CRUSHED STONE UNTIL PAVING IS COMPLETE.
14. STEEP SLOPES INCURRING DISTURBANCE MAY REQUIRE ADDITIONAL STABILIZATION MEASURES. THESE "SPECIAL" MEASURES SHALL BE DESIGNED BY THE APPLICANT'S ENGINEER AND BE APPROVED BY THE SOIL CONSERVATION DISTRICT.
15. THE HUDSON–ESSEX–PASSAIC SOIL CONSERVATION DISTRICT SHALL BE NOTIFIED, IN WRITING, FOR THE SALE OF ANY PORTION OF THE PROJECT OR FOR THE SALE OF INDIVIDUAL LOTS. NEW OWNERS' INFORMATION SHALL BE PROVIDED. ADDITIONAL MEASURES DEEMED NECESSARY BY DISTRICT OFFICIALS SHALL BE IMPLEMENTED AS CONDITIONS WARRANT.

SOIL EROSION & SEDIMENT CONTROL COMPACTION NOTES

SOIL COMPACTION TESTING REQUIREMENTS

1. SUBGRADE SOILS PRIOR TO THE APPLICATION OF TOPSOIL (SEE PERMANENT SEEDING AND STABILIZATION NOTES FOR TOPSOIL REQUIREMENTS) SHALL BE FREE OF EXCESSIVE COMPACTION TO A DEPTH OF 6.0 INCHES TO ENHANCE THE ESTABLISHMENT OF PERMANENT VEGETATIVE COVER.

2. AREAS OF THE SITE WHICH ARE SUBJECT TO COMPACTION TESTING AND/OR MITIGATION ARE GRAPHICALLY DENOTED ON THE CERTIFIED SOIL EROSION CONTROL PLAN.

3. COMPACTION TESTING LOCATIONS ARE DENOTED ON THE PLAN. A COPY OF THE PLAN OR PORTION OF THE PLAN SHALL BE USED TO MARK LOCATIONS OF TESTS, AND ATTACHED TO THE COMPACTION REMEDIATION FORM, AVAILABLE FROM THE LOCAL SOIL CONSERVATION DISTRICT. THIS FORM MUST BE FILLED OUT AND SUBMITTED PRIOR TO RECEIVING A CERTIFICATE OF COMPLIANCE FROM THE DISTRICT.

4. IN THE EVENT THAT TESTING INDICATES COMPACTION IN EXCESS OF THE MAXIMUM THRESHOLDS INDICATED FOR THE SIMPLIFIED TESTING METHODS (SEE DETAILS BELOW), THE CONTRACTOR/OWNER SHALL HAVE THE OPTION TO PERFORM EITHER (1) COMPACTION MITIGATION OVER THE ENTIRE MITIGATION AREA DENOTED ON THE PLAN (EXCLUDING EXEMPT AREAS), OR (2) PERFORM ADDITIONAL, MORE DETAILED TESTING TO ESTABLISH THE LIMITS OF EXCESSIVE COMPACTION WHEREUPON ONLY THE EXCESSIVELY COMPACTED AREAS WOULD REQUIRE COMPACTION MITIGATION. ADDITIONAL DETAILED TESTING SHALL BE PERFORMED BY A TRAINED, LICENSED PROFESSIONAL.

COMPACTION TESTING METHODS

A. PROBING WIRE TEST (SEE DETAIL)
B. HAND–HELD PENETROMETER TEST (SEE DETAIL)
C . TUBE BULK DENSITY TEST (LICENSED PROFESSIONAL ENGINEER REQUIRED
D. NUCLEAR DENSITY TEST (LICENSED PROFESSIONAL ENGINEER REQUIRED)

NOTE: ADDITIONAL TESTING METHODS WHICH CONFORM TO ASTM STANDARDS AND SPECIFICATIONS, AND WHICH PRODUCE A DRY WEIGHT, SOIL BULK DENSITY MEASUREMENT MAY BE ALLOWED SUBJECT TO DISTRICT APPROVAL.

SOIL COMPACTION TESTING IS NOT REQUIRED IF/WHEN SUBSOIL COMPACTION REMEDIATION (SCARIFICATION/TILLAGE (6" MINIMUM DEPTH) OR SIMILAR) IS PROPOSED AS PART OF THE SEQUENCE OF CONSTRUCTION.

PROCEDURES FOR SOIL COMPACTION MITIGATION

PROCEDURES SHALL BE USED TO MITIGATE EXCESSIVE SOIL COMPACTION PRIOR TO PLACEMENT OF TOPSOIL AND ESTABLISHMENT OF PERMANENT VEGETATIVE COVER.

RESTORATION OF COMPACTED SOILS SHALL BE THROUGH DEEP SCARIFICATION/TILLAGE (6" MINIMUM DEPTH) WHERE THERE IS NO DANGER TO UNDERGROUND UTILITIES (CABLES, IRRIGATION SYSTEMS, ETC.). IN THE ALTERNATIVE, ANOTHER METHOD AS SPECIFIED BY A NEW JERSEY LICENSED PROFESSIONAL ENGINEER MAYBE SUBSTITUTED SUBJECT TO DISTRICT APPROVAL.

PERMANENT VEGETATION COVER NOTES

DEFINITION:
ESTABLISHMENT OF PERMANENT VEGETATIVE COVER ON EXPOSED SOILS WHERE PERENNIAL VEGETATION IS NEEDED FOR LONG TERM PROTECTION.
PURPOSE:
TO PERMANENTLY STABILIZE THE SOIL ASSURING CONSERVATION OF SOIL AND WATER, AND TO ENHANCE THE ENVIRONMENT.
WHERE APPLICABLE:
ON EXPOSED SOILS THAT HAVE THE POTENTIAL FOR CAUSING OFFSITE ENVIRONMENTAL DAMAGE.

METHODS AND MATERIALS:

1. SITE PREPARATION:
   A. GRADE AS NEEDED AND FEASIBLE TO PERMIT THE USE OF CONVENTIONAL EQUIPMENT FOR SEEDBED PREPARATION, SEEDING, MULCH APPLICATION AND MULCH ANCHORING. ALL GRADING SHOULD BE DONE IN ACCORDANCE WITH STANDARDS FOR LAND GRADING, P. 4. 11.
   B. INSTALL NEEDED EROSION CONTROL PRACTICES AND FACILITIES SUCH AS DIVERSIONS, GRADE STABILIZATION STRUCTURES, CHANNEL STABILIZATION MEASURES, SEDIMENT BASINS AND WATERWAYS. SEE STANDARDS 4.2 THROUGH 4.16.
2. SEEDBED PREPARATION:
   A. APPLY LIMESTONE AND FERTILIZER ACCORDING TO SOIL TEST RECOMMENDATIONS SUCH AS THOSE OFFERED BY RUTGERS UNIVERSITY SOIL TESTING LABORATORY. SOIL SAMPLE MAILERS ARE AVAILABLE FROM THE LOCAL COOPERATIVE EXTENSION SERVICE OFFICE. IF SOIL TESTING IS NOT FEASIBLE ON SMALL OR VARIABLE SITES, OR WHERE TIMING IS CRITICAL, FERTILIZER MAY BE APPLIED AT THE RATE OF 500 POUNDS PER ACRE OR 11 POUNDS PER 1,000 SQUARE FEET OF 10–20–10 OR EQUIVALENT. IN ADDITION, 300 POUNDS 38–0–0 PER ACRE OR EQUIVALENT OF SLOW RELEASE NITROGEN MAY BE USED IN LIEU OF TOPDRESSING (SEE PAGE 3.2.7, SECTION IV).
   B. WORK LIME AND FERTILIZER INTO THE SOIL AS NEARLY AS PRACTICAL TO A DEPTH OF 4 INCHES WITH A DISC, SPRINGTOOTH HARROW OR OTHER SUITABLE EQUIPMENT. THE FINAL HARROWING OR DISCING OPERATION SHOULD BE ON THE GENERAL CONTOUR. CONTINUE TILLAGE UNTIL A REASONABLY UNIFORM FINE SEEDBED IS PREPARED. ALL BUT CLAY OR SILTY SOILS AND COARSE SANDS SHOULD BE ROLLED TO FIRM THE SEEDBED WHEREVER FEASIBLE.
   C. REMOVE FROM THE SURFACE ALL STONES TWO INCHES OR LARGER IN ANY DIMENSION. REMOVE ALL OTHER DEBRIS, SUCH AS WIRE, CABLE, TREE ROOFS, AND PIECES OF CONCRETE, CLODS, LUMPS OR OTHER UNSUITABLE MATERIAL.
   D. INSPECT SEEDBED JUST BEFORE SEEDING. IF TRAFFIC HAS LEFT THE SOIL COMPACTED, THE AREA MUST BE REFILLED AND FIRMED AS ABOVE.
   E. ACID SOIL CONDITIONS: SOILS HAVING A pH OF 4 OR LESS OR CONTAINING IRON SULFIDE SHALL BE COVERED WITH A MINIMUM OF 12 INCHES OF SOIL HAVING A pH OF 5 OR MORE BEFORE SEEDBED PREPARATION. THE ADDED SOIL SHALL BE LIMED AS ABOVE.
3. SEEDING
   A. COOL SEASON MIXTURE IS TO BE SELECTED. PLEASE REFER TO THE PLANTING PLAN.
4. MULCHING
   A. MULCHING IS REQUIRED ON ALL SEEDING. MULCH WILL INSURE AGAINST EROSION BEFORE GRASS IS ESTABLISHED AND WILL PROMOTE FASTER AND EARLIER ESTABLISHMENT. THE EXISTENCE OF SATISFACTORY PERMANENT VEGETATION AT THE TIME OF PROJECT OR UNIT COMPLETION SHALL BE DEEMED AS COMPLIANCE WITH THIS MULCHING REQUIREMENT.
   B. MULCH MATERIALS – REFER TO TEMPORARY VEGETATIVE COVER STANDARDS.
   C. SPREAD UNIFORMLY – REFER TO TEMPORARY VEGETATIVE COVER STANDARDS.
   D. MULCH ANCHORING – REFER TO TEMPORARY VEGETATIVE COVER STANDARDS.
   E. WOOD–FIBER OR PAPER – REFER TO TEMPORARY VEGETATIVE COVER STANDARDS.
5. IRRIGATION (WHERE FEASIBLE)
   A. IF SOIL MOISTURE IS DEFICIENT, AND MULCH IS NOT USED, SUPPLY NEW SEEDINGS WITH ADEQUATE WATER (A MINIMUM OF 1/4 INCH, TWICE A DAY UNTIL VEGETATION IS WELL ESTABLISHED), THIS IS ESPECIALLY TRUE WHEN SEEDINGS ARE MADE IN ABNORMALLY DRY OR HOT WEATHER OR ON DROUGHTY SITES.
6. TOPDRESSING
   A. SPRING SEEDINGS WILL REQUIRE AN APPLICATION OF FERTILIZER SUCH AS 10–10–10 OR EQUIVALENT AT 400 POUNDS PER ACRE OR 10 POUNDS PER 1,000 SQUARE FEET BETWEEN SEPTEMBER 1 AND OCTOBER 15.
   B. FALL SEEDINGS WILL REQUIRE THE ABOVE BETWEEN MARCH 15 AND MAY 1.
   C. MIXTURES DOMINATED BY WEEPING LOVEGRASS OR LEGUMES MAY NOT NEED TOPDRESSING.
   D. BERMUDAGRASS SHOULD BE TOPDRESSED BEFORE AUGUST 15.
   E. IF SLOW RELEASE NITROGEN (300 POUNDS 38–0–0 PER ACRE OR EQUIVALENT) IS USED IN ADDITION TO SUGGESTED FERTILIZER, THIS FOLLOW–UP OF TOPDRESSING IS NOT MANDATORY.

METHOD OF DUST CONTROL

SHOULD DUST CONTROL BE A PROBLEM PRIOR TO PERMANENT SOIL STABILIZATION, ANY OF THE FOLLOWING MEASURES SHOULD BE UTILIZED:

1. APPLY MULCH
2. APPLY SPRAY ON ADHESIVES

	WATER DELUSION	TYPE OF NOZZLE	APPLY GALLONS/ACRE
ANIONIC ASPHALT EMULSION	7:1	COARSE SPRAY	1,200
LATEX EMULSION	121/2:1	FINE SPRAY	235
RESIN IN WATER	4:1	FINE SPRAY	300

3. KEEP DISTURBED SOILS MOIST BY PERIODIC WATER SPRAYING
4. CALCIUM CHLORIDE SHALL BE IN THE FORM OF LOOSE DRY GRANULES OR FLAKES FINE ENOUGH TO FEED THROUGH COMMONLY USED SPREADERS AT A RATE THAT WILL KEEP SURFACE MOIST BUT NOT CAUSE POLLUTION OR PLANT DAMAGE. IF USED ON STEEPER SLOPES, THEN USE OTHER PRACTICES TO PREVENT WASHING INTO STREAMS OR ACCUMULATION AROUND PLANTS.

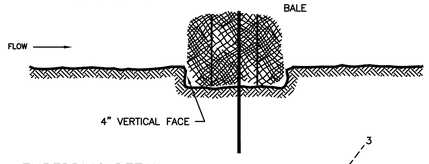

EMBEDDING DETAIL

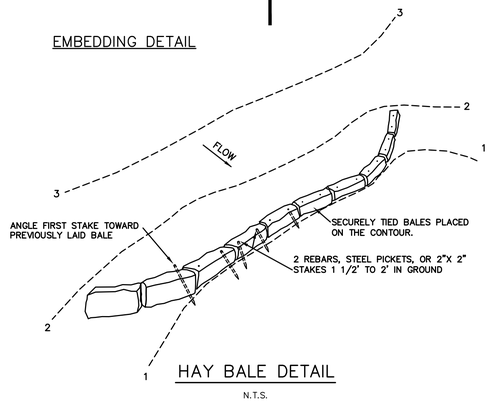

HAY BALE DETAIL

N.T.S.

SIMPLIFIED TESTING METHODS

PROBING WIRE TEST- 15.5 GA STEEL WIRE (SURVEY FLAG)

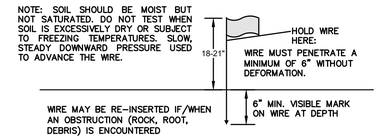

HANDHELD SOIL PENETROMETER TEST

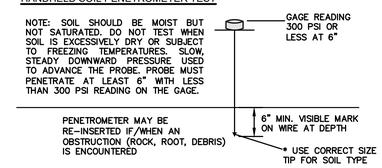

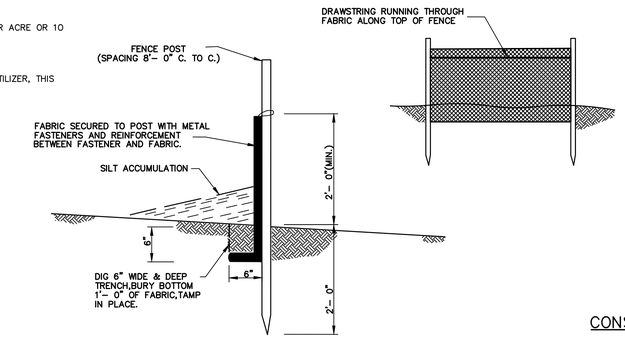

SILT FENCE DETAIL

N.T.S.

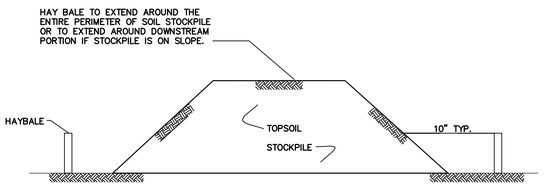

TEMPORARY STOCKPILE DETAIL

N.T.S.

NOTES:

1. AN ON–SITE DRAINAGE SWALE SHALL BE LOCATED BETWEEN THE TOPSOIL STOCKPILE AND OFF–SITE PROPERTY.
2. REFERENCE IS MADE TO THE HAY BALES DETAIL FOR MATERIALS AND INSTALLATION METHODS.
3. IF THE STOCKPILE IS TO REMAIN FOR MORE THAN 14 DAYS, IT SHALL BE STABILIZED WITH BURLAP MATTING OR SEEDED WITHIN 7 DAYS OF COMPLETION TO MINIMIZE EROSION. ACID PRODUCING SOILS SHALL BE COVERED WITH POLYETHYLENE SHEETING.
4. INSPECTION OF HAY BALES SHOULD BE AT LEAST ONCE PER WEEK AND AFTER RAIN EVENTS IN EXCESS OF 1/2". REPAIR OR REPLACEMENT SHALL BE MADE PROMPTLY AS NEEDED.
5. SEDIMENT TRAPPED BY THE BALES SHALL BE REMOVED AND PROPERLY DISPOSED OF WHENEVER SIGNIFICANT ACCUMULATION OCCURS.
6. HAY BALES SHALL BE MAINTAINED IN PLACE UNTIL TOPSOIL STOCKPILE HAS BEEN ELIMINATED AND SHALL BE REMOVED ONLY WHEN THE PROJECT IS COMPLETED.

CONSTRUCTION SEQUENCE

IMPLEMENTATION OF SOIL EROSION AND SEDIMENT CONTROL MEASURES	1 WEEK
IMPORT FILL AND CONSTRUCT SUBSURFACE DRAINAGE AND UTILITY LINES	3 WEEKS
CONSTRUCT PARKING AREA, WALKWAYS, AND ENCLOSED DOG AREAS	8 WEEKS
FINAL GRADING	2 WEEKS
APPLY 5" OF TOPSOIL AND ESTABLISH FINAL VEGETATIVE COVER	1 WEEK
REMOVE SOIL EROSION MEASURES	1 WEEK
	16 WEEKS

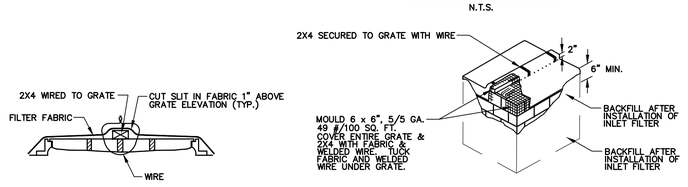

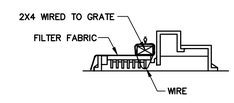

NOTE: TWO TRAFFIC CONES TO BE PLACED ON EACH SIDE OF INLET

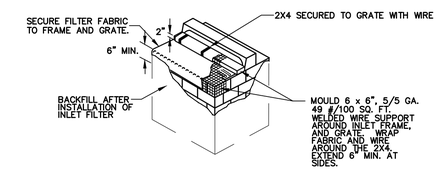

1. CONTRACTOR IS TO CLEAN INLET FILTER AFTER EVERY STORM.
2. CONTRACTOR TO REMOVE FABRIC AND MESH JUST PRIOR TO PAVING.
3. IF BOTTOM OF ROADWAY IS BELOW TOP OF INLET GRATE, CONSTRUCT PROPERLY FILTERED OPENING(S) IN INLET WALL TO ALLOW PASSAGE OF WATER.
4. THE PROTECTION DEVICE WILL BE DESIGNED TO CAPTURE OR FILTER RUNOFF FROM THE 1 YEAR, 24 HOUR STORM EVENT AND SHALL SAFELY CONVEY HIGHER FLOWS DIRECTLY INTO THE STORM SEWER SYSTEM.

INLET FILTER, TYPE 1 DETAIL

N.T.S.

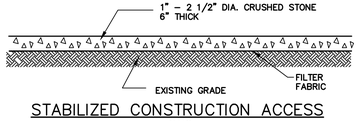

STABILIZED CONSTRUCTION ACCESS

N.T.S.

NO.	DATE	DESCRIPTION	SURVEYED BY	DRAWN BY	DESIGNED BY	CHECKED BY

PLOT BY:SELWYN JOY PLOT DATE:3/11/2022

BOSWELL ENGINEERING
EST. 1924
ENGINEERS – SURVEYORS – PLANNERS – SCIENTISTS
330 PHILLIPS AVENUE, SOUTH HACKENSACK, N.J. 07606
TEL: (201) 641–0770 • FAX: (201) 641–1831
N.J. CERTIFICATE OF AUTHORIZATION No. 24GA27958000

STEPHEN T. BOSWELL
PROFESSIONAL ENGINEER N.J. LIC. 34680

JOSEPH A. POMANTE
Digitally signed by Joseph A. Pomante
Date: 2022.03.14 16:20:08 -04'00'
PROFESSIONAL ENGINEER N.J. LIC. 43137

FARM ROAD PARK
BLOCK 203 LOTS 41, 42, & 43

SOIL EROSION AND SEDIMENT CONTROL DETAILS

TOWN OF SECAUCUS

HUDSON COUNTY NEW JERSEY

SURVEYED BY:--- DRAWN BY: S.J.	DESIGNED BY:S.J. CHECKED BY: F.J.R.	SCALE: N.T.S.	JOB NO. SEC–155	DATE: 3/07/22

CADD FILE: SEC–155–SESC.DWG SHEET 8 OF 13

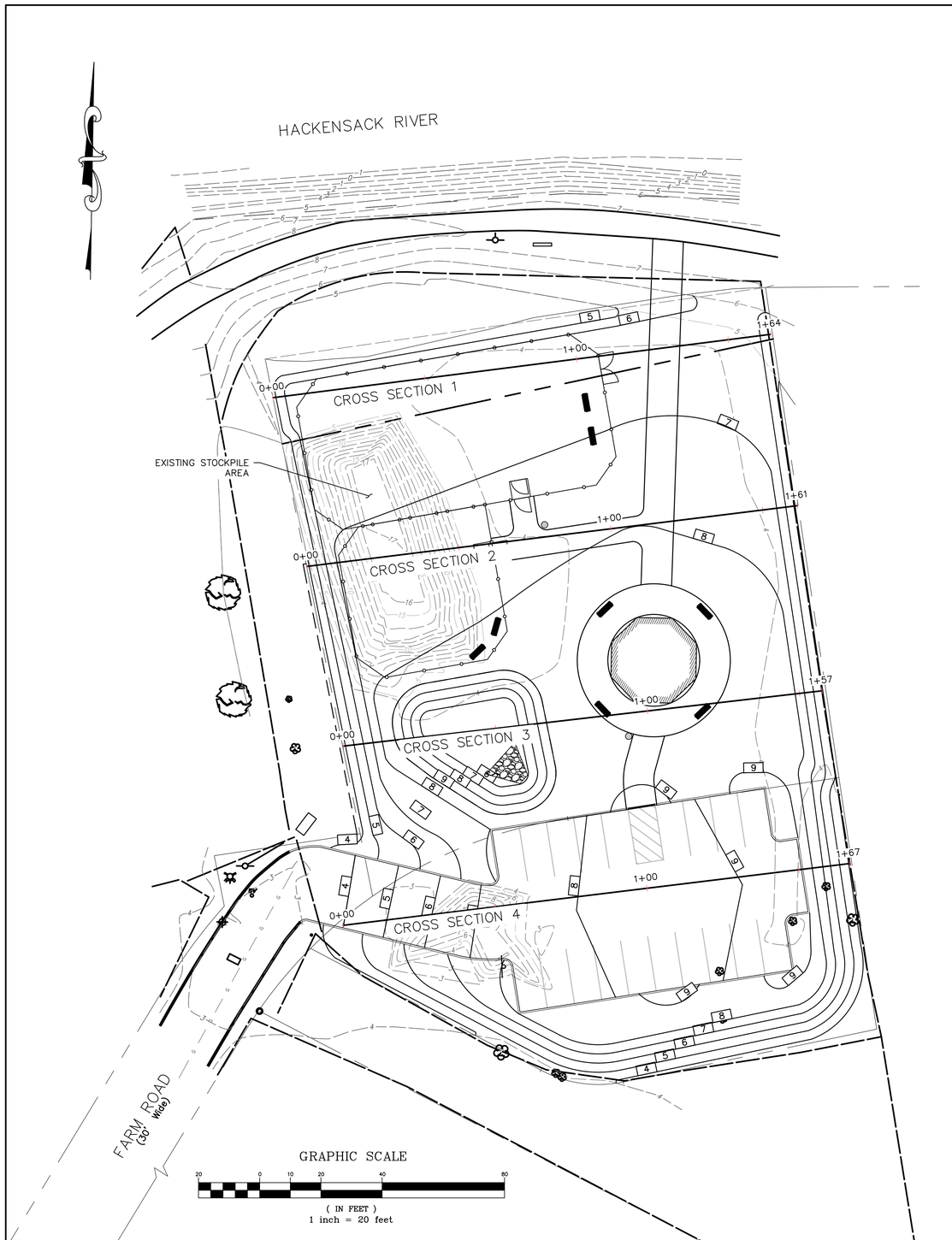

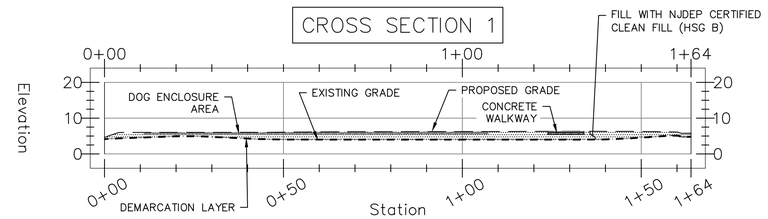

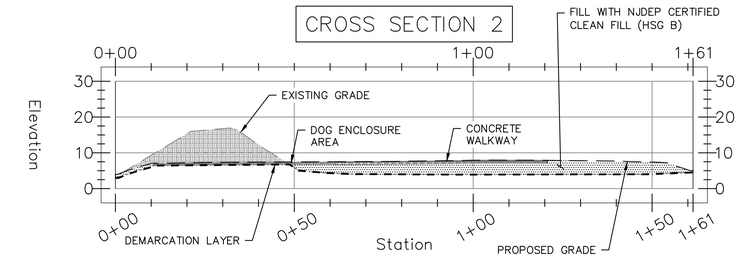

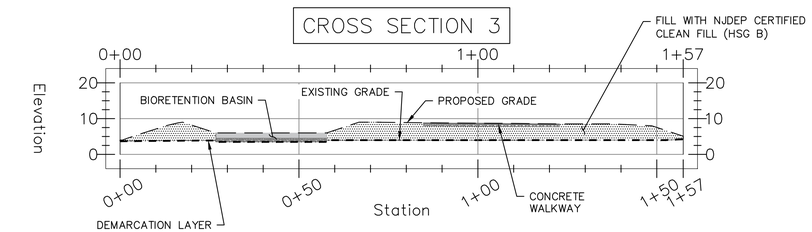

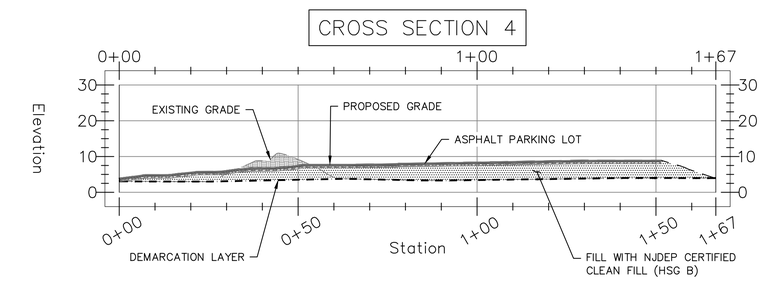

VERTICAL AND HORIZONTAL SCALE

20 0 10 20 40 80

(IN FEET)
1 inch = 20 feet

EXCAVATION REQUIREMENTS:

1. PLAY AREAS/DOG ENCLOSURE: 12" MIN. NJDEP CERTIFIED CLEAN FILL ABOVE DEMARCATION LAYER
2. CONCRETE/ASPHALT AREAS: MIN. 4" ASPHALT AND 4" MIN. SUB BASE OVER DEMARCATION LAYER
3. VEGETATIVE COVER: 10" MIN. NJDEP CERTIFIED CLEAN FILL ABOVE DEMARCATION LAYER
4. SHRUBS AND TREES: TREES AND/OR SHRUBS CAN BE PLANTED WITHIN BARRIER AND/OR BUFFER LAYERS, BUT MUST MAINTAIN 1' MIN. NJDEP CERTIFIED CLEAN FILL ON ALL SIDES AND BELOW ROOT BALL.
5. UNDERGROUND UTILITY CORRIDORS PLACED IN TRENCHES: NJDEP CERTIFIED CLEAN FILL FROM SURFACE DOWN TO UTILITY (1' MIN.) OVER BUFFER (1' MIN CLEAN FILL TO BE PLACED BELOW AND ON SIDES OF UTILITY). DEMARCATION LAYER SHOULD BE PLACED ON BOTTOM AND SIDES OF TRENCH.

LEGEND:

- TOP OF BANK
- PROPERTY LINE
- 140 EXISTING CONTOUR LINES
- 140 PROPOSED CONTOUR LINES
- FENCE

PLAN NOTES:

1. BASEMAP REFERENCES SURVEY PERFORMED BY BOSWELL ENGINEERING.
2. BEARINGS SHOWN HEREON ARE BASED ON THE NORTH AMERICAN DATUM OF 1983.
3. ELEVATIONS SHOWN HEREON ARE BASED ON NAVD 1988. REFERENCE MONUMENT: L 62 (PID KV0462)..TO CONVERT FROM NAVD 88 TO NGVD 29, ADD 1.056 FEET.
4. UNDERGROUND UTILITIES IF DEPICTED ARE BASED ON VISIBLE EVIDENCE. THE LACK OF UTILITY INFORMATION DOES NOT DENY THE EXISTENCE OF SAME. REFERENCE TO THE APPROPRIATE UTILITY AUTHORITY SHOULD BE MADE TO VERIFY THE PRESENCE OR ABSENCE OF UTILITIES PRIOR TO ANY EXCAVATION.

NO.	DATE	DESCRIPTION	SURVEYED BY	DRAWN BY	DESIGNED BY	CHECKED BY

PLOT BY:SELWYN JOY PLOT DATE:3/11/2022

BOSWELL ENGINEERING
EST. 1924
ENGINEERS – SURVEYORS – PLANNERS – SCIENTISTS
330 PHILLIPS AVENUE, SOUTH HACKENSACK, N.J. 07606
TEL: (201) 641–0770 • FAX: (201) 641–1831
N.J. CERTIFICATE OF AUTHORIZATION No. 24GA27958000

STEPHEN T. BOSWELL
PROFESSIONAL ENGINEER N.J. LIC. 34680

JOSEPH A. POMANTE
Digitally signed by Joseph A. Pomante
Date: 2022.03.14 16:20:36 -04'00'
PROFESSIONAL ENGINEER N.J. LIC. 43137

FARM ROAD PARK
BLOCK 203 LOTS 41, 42, & 43
CROSS SECTION PLAN
TOWN OF SECAUCUS
HUDSON COUNTY NEW JERSEY

SURVEYED BY:– DRAWN BY: A.S.	DESIGNED BY:S.J. CHECKED BY: F.J.R.	SCALE: 1" = 20'	JOB NO. SEC–155	DATE: 3/07/22

CADD FILE: SEC–155–CSP.DWG SHEET 9 OF 13

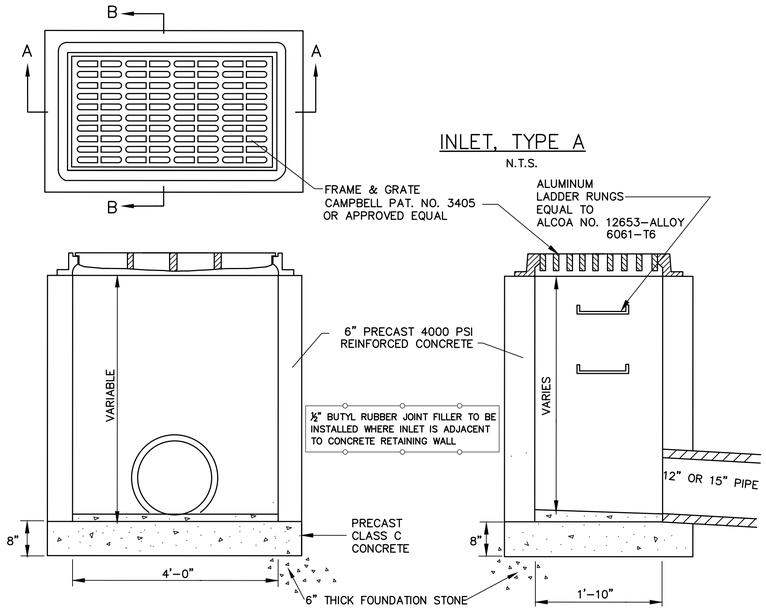

INLET, TYPE A

N.T.S.

SECTION A–A

SECTION B–B

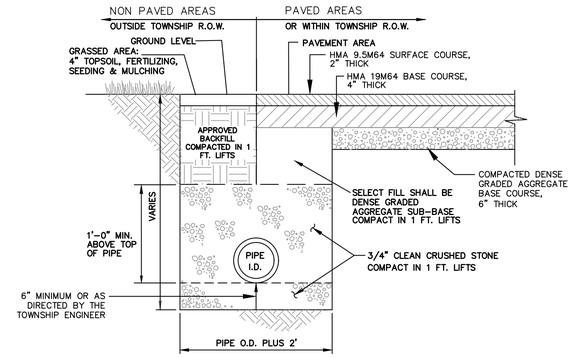

NOTES:
1. COMPACTED BACKFILL TO BE FREE OF EXCESSIVE CLAY. ORGANIC MATERIAL AND BOULDERS.
2. RECYCLED CONCRETE IS NOT TO BE USED AS BACKFILL.

TYPICAL TRENCH DETAIL

N.T.S.

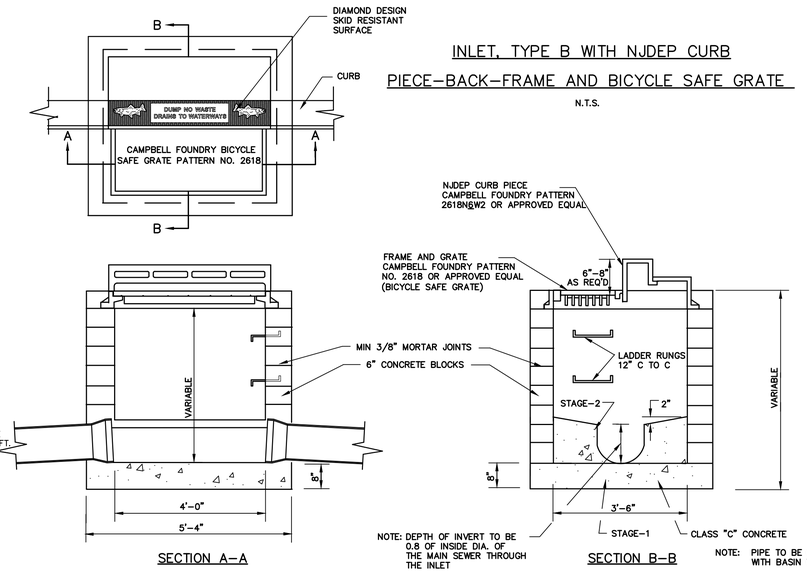

INLET, TYPE B WITH NJDEP CURB

PIECE–BACK–FRAME AND BICYCLE SAFE GRATE

N.T.S.

SECTION A–A

SECTION B–B

NOTE: PIPE TO BE CUT FLUSH WITH BASIN WALL

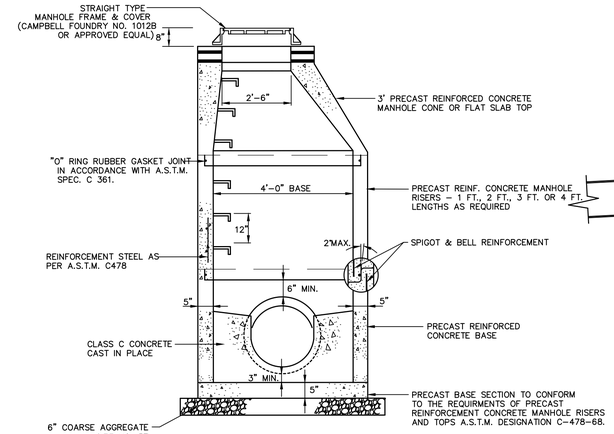

PRECAST MANHOLE

N.T.S.

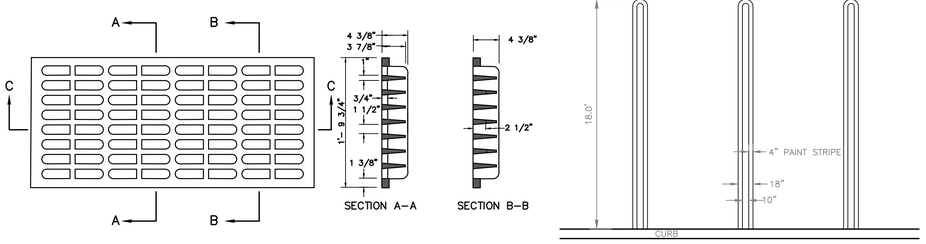

PARKING SPACE HAIRPIN STRIPING DETAIL

N.T.S.

SHRUB PLANTING DETAIL

N.T.S.

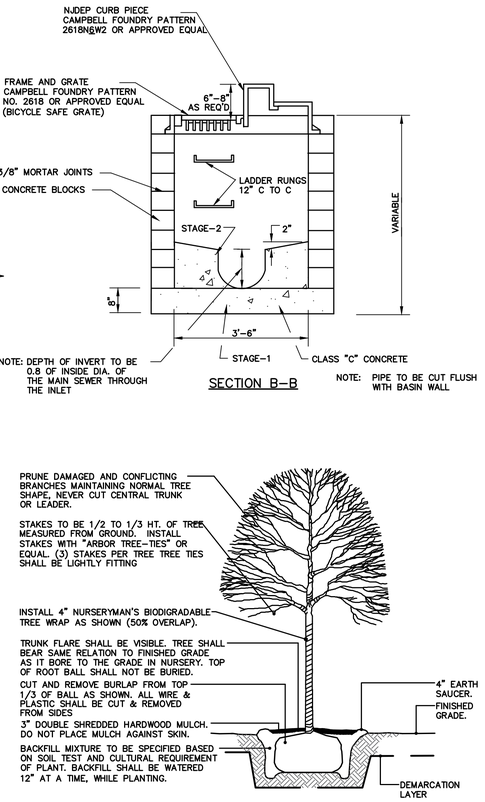

DECIDUOUS TREE PLANTING DETAIL

N.T.S.

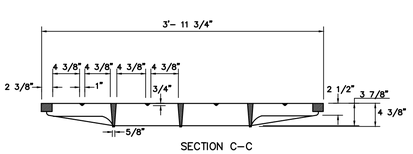

SECTION C–C

BICYCLE SAFE GRATE (CAST IRON)

N.T.S.

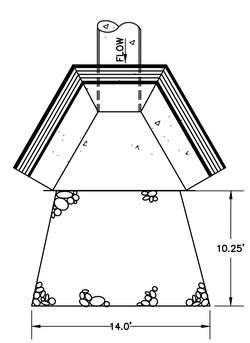

CONDUIT OUTLET PROTECTION

N.T.S.

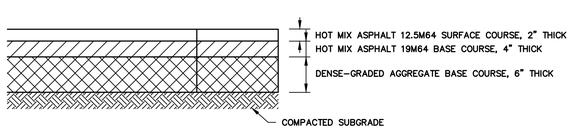

HOT MIX ASPHALT PAVEMENT SECTION

N.T.S.

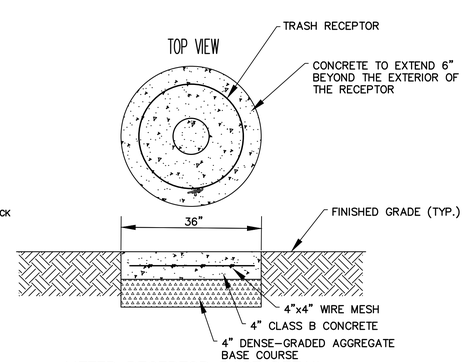

LITTER RECEPTOR BASE DETAIL

N.T.S.

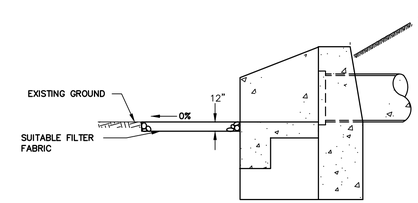

WATERING NOTES

1. NEWLY PLANTED AREAS SHALL BE ADEQUATELY IRRIGATED, IMMEDIATELY FOLLOWING PLANTING. WATER SHALL BE APPLIED TO EACH TREE AND SHRUB IN A MANNER TO NOT DISTURB BACKFILL. ALL MATERIALS IN THE PLANTING HOLE ARE THOROUGHLY SATURATED. WATERING SHALL CONTINUE AT LEAST UNTIL PLANTS ARE ESTABLISHED OR TWO (2) SEASONS.
2. SITE OWNER SHALL PROVIDE WATER IF AVAILABLE ON SITE AT THE TIME OF PLANTING. IF WATER IS NOT AVAILABLE ON SITE, CONTRACTOR SHALL SUPPLY ALL NECESSARY WATER. THE USE OF WATERING BAGS IS RECOMMENDED FOR ALL NEWLY PLANTED TREES.
3. IF AN IRRIGATION SYSTEM HAS BEEN INSTALLED ON SITE, IT SHALL BE USED TO WATER PROPOSED PLANT MATERIAL, BUT ANY FAILURE OF THE SYSTEM DOES NOT ELIMINATE THE CONTRACTOR'S RESPONSIBILITY OF MAINTAINING THE DESIRED MOISTURE LEVEL FOR VIGOROUS, HEALTHY GROWTH.

NO.	DATE	DESCRIPTION	SURVEYED BY	DRAWN BY	DESIGNED BY	CHECKED BY

PLOT BY:SELWYN JOY PLOT DATE:3/11/2022

BOSWELL ENGINEERING
EST. 1924
ENGINEERS – SURVEYORS – PLANNERS – SCIENTISTS
330 PHILLIPS AVENUE, SOUTH HACKENSACK, N.J. 07606
TEL: (201) 641–0770 • FAX: (201) 641–1831
N.J. CERTIFICATE OF AUTHORIZATION No. 24GA27958000

STEPHEN T. BOSWELL
PROFESSIONAL ENGINEER N.J. LIC. 34680

JOSEPH A. POMANTE
Digitally signed by Joseph A. Pomante
Date: 2022.03.14 16:21:04 -04'00'
PROFESSIONAL ENGINEER N.J. LIC. 43137

FARM ROAD PARK
BLOCK 203 LOTS 41, 42, & 43

DETAIL SHEET – 1

TOWN OF SECAUCUS

HUDSON COUNTY NEW JERSEY

SURVEYED BY:– –	DESIGNED BY:S.J.	SCALE:	JOB NO.	DATE:
DRAWN BY: S.J.	CHECKED BY:F.J.R.	N.T.S.	SEC–155	3/07/22

CADD FILE: SEC–155–DS.DWG SHEET 10 OF 13

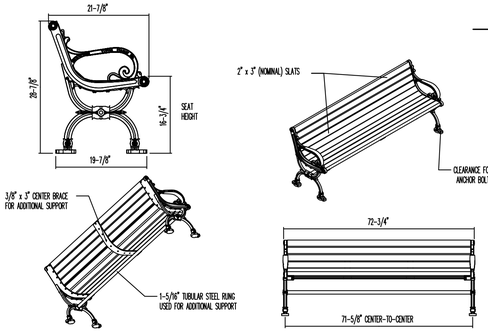

CENTER-TO-CENTER DISTANCES ARE APPROXIMATE (VARIATIONS IN CASTINGS ARISE FROM DIFFERENT RATES OF COOLING)

STANDARD BENCH WITH DUCTILE IRON END FRAMES SHOWN: STANDARD 6-FOOT LENGTH

VICTOR STANLEY MODEL C-10 CLASSIC SERIES BENCH, 6' IN LENGTH:
END FRAME TYPE :
DUCTILE IRON: BLACK IN COLOR
SLAT TYPE :
REINFORCED RECYCLED PLASTIC: CHERRY IN COLOR

NOTES:
1. DUCTILE IRON CASTINGS COME WITH A TEN YEAR WARRANTY AGAINST BREAKAGE.
2. DRAWING NOT TO SCALE. DO NOT SCALE DRAWINGS.
3. ALL FABRICATED METAL COMPONENTS ARE STEEL SHOTBLASTED, ETCHED, PHOSPHATIZED, PREHEATED, AND ELECTROSTATICALLY POWDER-COATED WITH T.G.I.C. POLYESTER POWDER COATINGS. PRODUCTS ARE FULLY CLEANED AND PRETREATED, PREHEATED AND COATED WHILE HOT TO FILL CREVICES AND BUILD COATING FILM. COATED PARTS ARE THEN FULLY CURED TO COATING MANUFACTURER'S SPECIFICATIONS. THE THICKNESS OF THE RESULTING FINISH AVERAGES 8-10 MILS (200-250 MICRONS).
4. IT IS NOT RECOMMENDED TO LOCATE ANCHOR BOLTS UNTIL BENCH IS IN PLACE. THIS VICTOR STANLEY, INC. PRODUCT MUST BE PERMANENTLY AFFIXED TO THE GROUND. CONSULT YOUR LOCAL CODES FOR REGULATIONS.
5. ANCHOR BOLTS NOT PROVIDED BY VICTOR STANLEY, INC. MUST BE ANCHORED INTO CONCRETE FOOTINGS (4 BOLTS PER BENCH)
6. THIS PRODUCT IS SHIPPED PARTIALLY UNASSEMBLED.

6' LONG BENCH DETAIL
N.T.S.

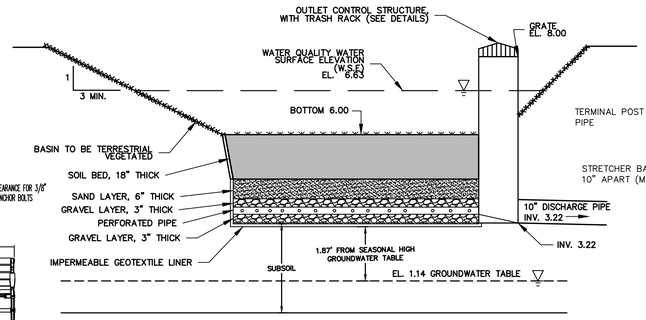

BIO-RETENTION SYSTEM DETAIL
N.T.S.

NOTES:
1. SOIL MIX FOR BIORETENTION SHOULD CONSIST OF THE FOLOWING MIX BY WEIGHT: 85-95% SAND, WITH NO MORE THAN 25% OF THE SAND AS FINE OR VERY FINE SANDS; NO MORE THAN 15% SILT AND CLAY WITH 2% TO 5% CLAY CONTENT. THE ENTIRE MIX MUST THEN BE AMENDED WITH 3 TO 7% ORGANICS, BY WEIGHT.
2. SOIL MIX FOR BIORETENTION SHALL HAVE INFILTRATION RATES GREATER THAN 5 CENTIMETERS (2 INCHES) PER HOUR.
3. THE PH OF THE SOIL BED MATERIAL MUST RANGE FROM 5.5 TO 6.5.
4. THE SOIL BED MATERIAL MUST BE PLACED IN LIFTS NOT TO EXCEED 8 INCHES. ADDITIONAL MATERIALS MAY BE NECESSARY TO ACCOUNT FOR SETTLING OVER TIME.

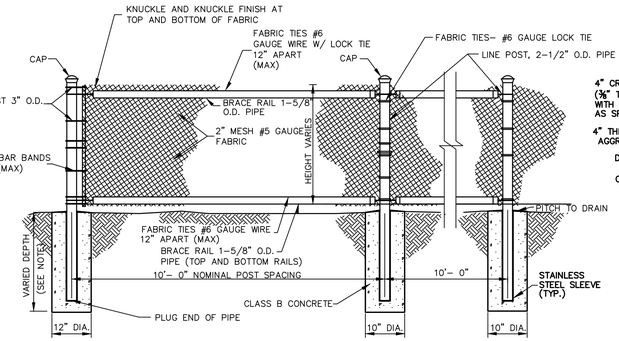

1. FABRIC SHALL BE 6 GA. CORE/5 GA. FINISH EXTRUDED VINYL COATED. ALL PIPE TO CONFORM TO CURRENT ASTM DESIGNATED A120, SCHEDULE 40, POLYESTER POWDER COATED.
2. ALL POSTS TO BE SET IN CONCRETE WITH STAINLESS STEEL SLEEVES. FOOTINGS SHALL HAVE 36" DEPTH ON TERMINAL POSTS AND 30" DEPTH ON LINE POSTS.
3. COLOR SHALL BE DETERMINED BY OWNER.

CHAIN LINK FENCE DETAIL
N.T.S.

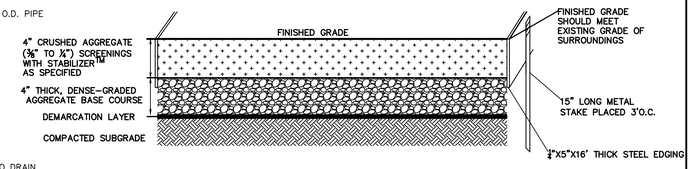

DOG ENCLOSURE AREA CROSS SECTION
N.T.S.

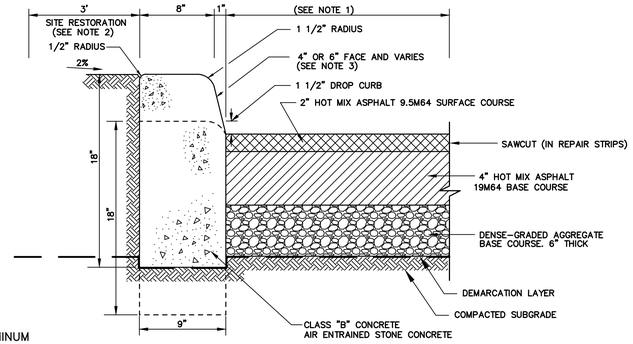

1-1/2" (DROP CURB), 4" OR 6" CURB FACE
N.T.S.

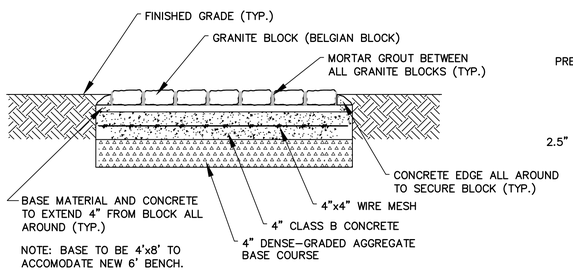

BENCH BASE DETAIL
N.T.S.

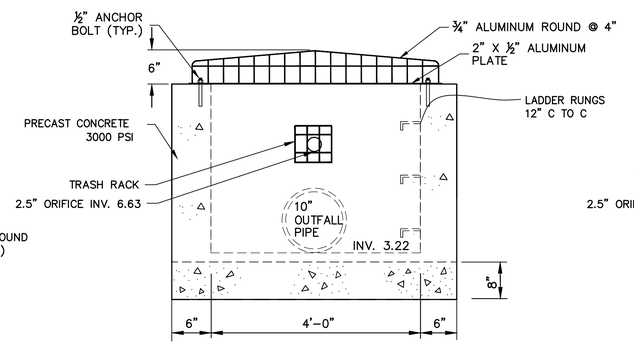

SECTION A-A

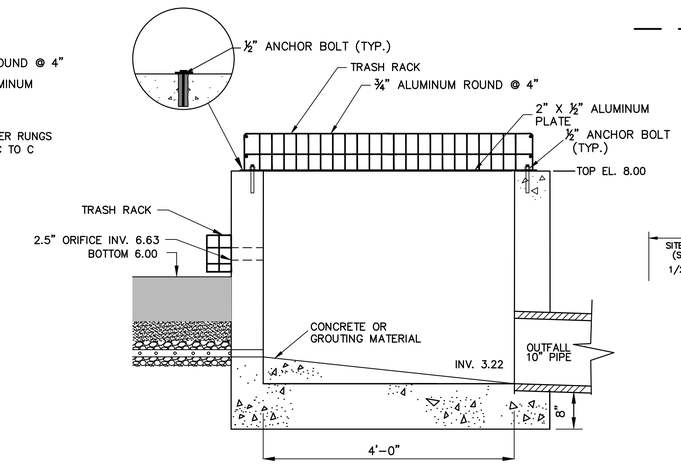

SECTION B-B

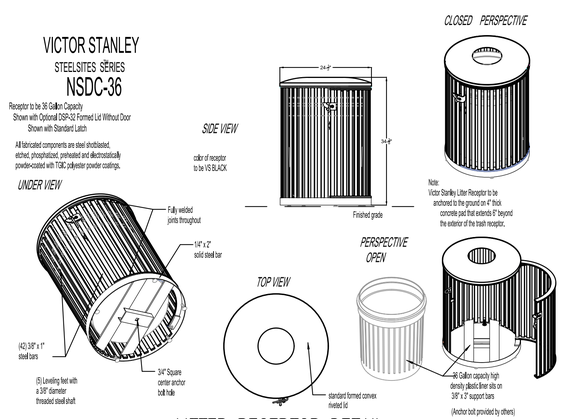

LITTER RECEPTOR DETAIL
N.T.S.

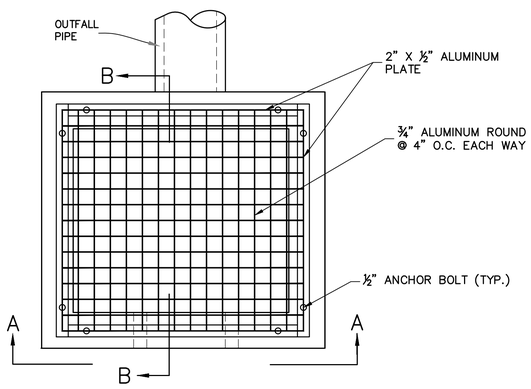

OUTLET STRUCTURE

ANCHOR BOLTS
1. ANCHOR BOLTS SHALL BE STAINLESS STEEL ASTM F-593 TYPE 316.
2. ANCHOR BOLTS SHALL BE ADHESIVE ANCHORS WITH A MINIMUM EMBEDMENT OF 12 x BOLT DIA., AND MINIMUM EDGE DISTANCE OF 6 x BOLT DIA. (2" MINIMUM).

ALUMINUM SAFETY FRAME
1. ALUMINUM PLATE SHALL BE ASTM B-209 TYPE 6061.
2. ALUMINUM ROUNDS SHALL BE ASTM B-211 TYPE 6061.
3. ALL ALUMINUM SHALL BE WELDED IN ACCORDANCE WITH AWS D1.2.
4. ALL ALUMINUM IN CONTACT WITH CONCRETE, GROUT, MASONRY, OR DISSIMILAR METALS SHALL BE COATED WITH A HEAVY BITUMINOUS PAINT.

NOTE:
CONCRETE TOP SLAB AND CHAMBER SHALL BE DESIGNED AND SUBMITTED BY CONTRACTOR'S PRECASTER AS A SHOP DRAWING. ENGINEERING CALCULATIONS AND DRAWINGS SIGNED AND SEALED BY A NJ PROFESSIONAL ENGINEER SHALL BE SUBMITTED FOR REVIEW AND APPROVAL AS PART OF THE SHOP DRAWINGS.

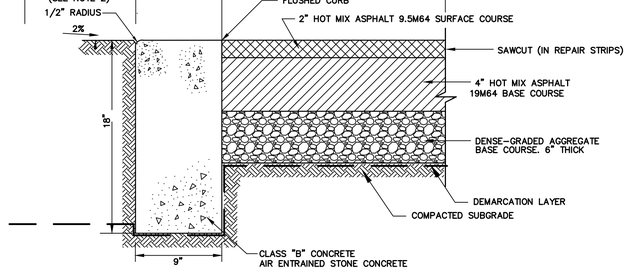

FLUSHED CURB
N.T.S.

NOTE: 1) IN AREAS WHERE EXISTING PAVEMENT IS TO REMAIN, A 2' WIDE PAVEMENT REPAIR STRIP SHALL BE CONSTRUCTED ALONG PROPOSED CURB. THE FOLLOWING ITEMS OF WORK WITHIN THE REPAIR STRIP ARE INCLUDED UNDER 9" x 18" CONCRETE VERTICAL CURB:
- SAWCUT
- CONCRETE CURING AND SEALING COMPOUND
- EXCAVATION, UNCLASSIFIED
- BACKFILL MATERIAL
- COMPACTED SUBGRADE
- DENSE-GRADED AGGREGATE BASE COURSE
- DENSE-GRADED AGGREGATE BASE COURSE
- REMOVAL OF MONOLITHIC CONCRETE CURB AND GUTTER (IF REQUIRED)

2) FOR FLUSHED CURB, VERTICAL DEPTH WILL BE 18".
3) FULL CURB DEPTH SHALL BE MAINTAINED AT 4", 6" OR DROP CURBS.
4) 4" THICK, COARSE AGGREGATE SIZE NO. 57 SHALL BE CONSTRUCTED UNDERNEATH PROPOSED CURB IN WET FIELD CONDITIONS AS DIRECTED BY ENGINEER.
5) TOP OF CURB SHALL NOT BE SET HIGHER THAN ADJACENT EXISTING OR PROPOSED SIDEWALK UNDER ANY CONDITION.
6) ALL CONCRETE SURFACES SHALL BE TREATED WITH A CONCRETE CURING AND SEALING COMPOUND.

9" x 18" CONCRETE VERTICAL CURB
N.T.S.

NO.	DATE	DESCRIPTION	SURVEYED BY	DRAWN BY	DESIGNED BY	CHECKED BY

PLOT BY:SELWYN JOY PLOT DATE:3/11/2022

BOSWELL ENGINEERING
EST. 1924
ENGINEERS – SURVEYORS – PLANNERS – SCIENTISTS
330 PHILLIPS AVENUE, SOUTH HACKENSACK, N.J. 07606
TEL: (201) 641-0770 • FAX: (201) 641-1831
N.J. CERTIFICATE OF AUTHORIZATION No. 24GA27958000

STEPHEN T. BOSWELL
PROFESSIONAL ENGINEER N.J. LIC. 34680

JOSEPH A. POMANTE
Digitally signed by Joseph A. Pomante
Date: 2022.03.14 16:21:33 -04'00'
PROFESSIONAL ENGINEER N.J. LIC. 43137

FARM ROAD PARK
BLOCK 203 LOTS 41, 42, & 43
DETAIL SHEET – 2
TOWN OF SECAUCUS
HUDSON COUNTY NEW JERSEY

SURVEYED BY:--	DESIGNED BY:S.J.	SCALE:	JOB NO.	DATE:
DRAWN BY: S.J.	CHECKED BY: F.J.R.	N.T.S.	SEC-155	3/07/22

CADD FILE: SEC-155-DS.DWG SHEET 11 OF 13

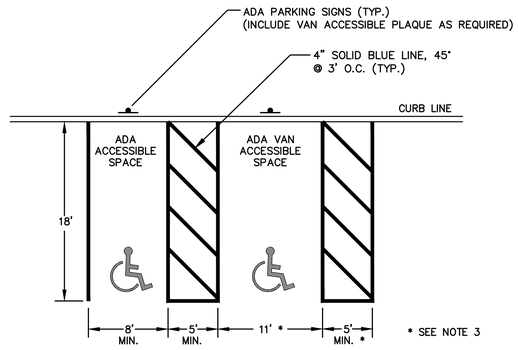

NOTES:

1. PARKING SPACE MARKINGS SHALL COMPLY WITH LATEST MUTCD AND ADA STANDARDS.
2. ALL PARKING SPACE STRIPING SHALL BE 4" WIDE BLUE EPOXY-RESIN.
3. VAN ACCESSIBLE SPACES SHALL BE 8' WIDE MIN. WHERE ADJACENT ACCESS AISLES ARE 8' WIDE.

ADA PARKING SPACE

PARKING AREA SIGN

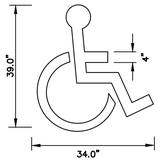

ADA SYMBOL

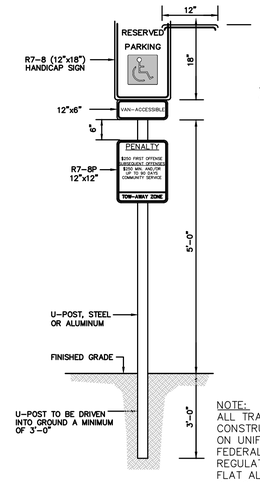

SIGN & POST DETAIL

NOT TO SCALE

NOTE:
ALL TRAFFIC SIGNS MUST CONFORM IN FACE DESIGN AND CONSTRUCTION TO SPECIFICATIONS FOUND IN THE MANUAL ON UNIFORM TRAFFIC CONTROL DEVICES, U.S.D.O.T., FEDERAL HIGHWAY ADMINISTRATION. SPECIFICALLY, REGULATORY & WARNING SIGNS SHALL BE FABRICATED OF FLAT ALUMINUM SHEETS AND SHALL BE COVERED WITH DIAMOND GRADE REFLECTIVE SHEETING, SERIES 4000 TYPE XI DESIGNATION PER ASTM.

TRAFFIC SIGN DETAILS

NOT TO SCALE

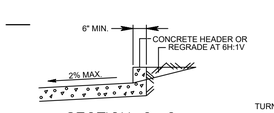

SECTION C–C

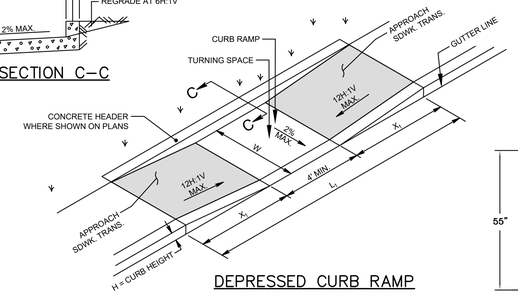

DEPRESSED CURB RAMP

N.T.S.

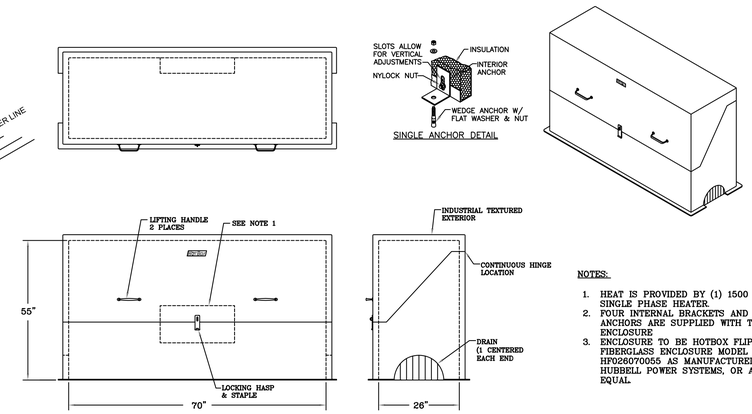

NOTES:

1. HEAT IS PROVIDED BY (1) 1500 WATT, 120V SINGLE PHASE HEATER.
2. FOUR INTERNAL BRACKETS AND CONCRETE ANCHORS ARE SUPPLIED WITH THE ENCLOSURE
3. ENCLOSURE TO BE HOTBOX FLIP-TOP FIBERGLASS ENCLOSURE MODEL NO. HF0260700S5 AS MANUFACTURED BY HUBBELL POWER SYSTEMS, OR APPROVED EQUAL.

HOTBOX WATER METER ENCLOSURE

N.T.S.

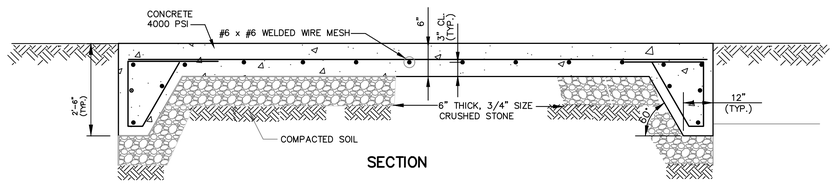

CONCRETE PAD FOR PAVILION (ALTERNATE)

N.T.S.

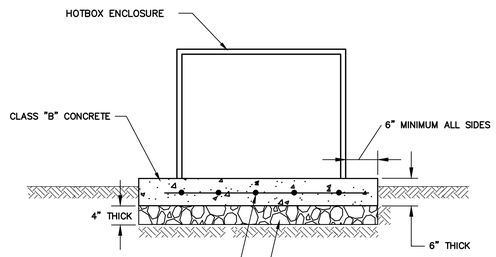

NOTES:

1. CONCRETE FOUNDATION MINIMUM DIMENSION: 82" X 42"
2. TOP OF SLAB MUST SIT ABOVE EXISTING GRADE

CONCRETE PAD DETAIL

N.T.S.

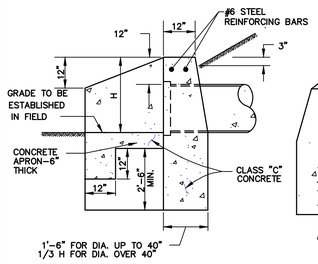

OUTLET END

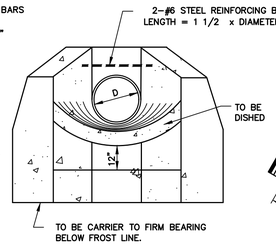

END VIEW

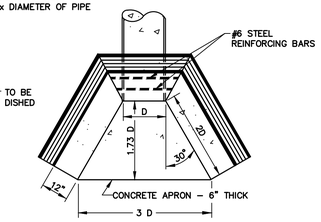

PLAN

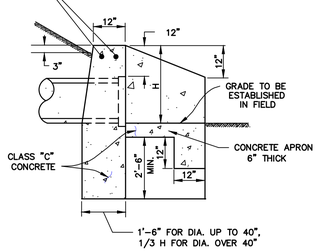

INLET END

VOLUME OF CONCRETE IN HEADWALLS IN CUBIC YARDS

PIPE SIZE	CORR. STEEL PIPE	REIN. CONC. PIPE	APRONS IN CUBIC YARDS
12"	1.4 C.Y.	1.4 C.Y.	0.2 C.Y.
15"	1.7	1.7	0.2
18"	2.1	2.1	0.3
21"	2.5	2.5	0.4
24"	2.9	2.9	0.5
27"	3.3	3.4	0.6
30"	3.7	3.8	0.7
36"	4.7	4.8	0.9
42"	5.8	6.3	1.2
48"	7.6	8.4	1.5
54"	9.7	10.7	1.8
60"	12.2	13.4	2.1
66"	15.0	16.4	2.5
72"	18.1	19.9	3.0

GENERAL NOTES

1. ALL EDGES TO BE CHAMFERED 1".
2. THE RUBBING OF HEADWALLS TO REMOVE FORM MARKS AS REQUIRED IN DIVISION 500 FOR CONCRETE STRUCTURES, WILL NOT BE REQUIRED FOR HEADWALLS AT THE BOTTOM OF EMBANKMENTS IN RURAL AREAS.
3. FOR SLOPE DRAIN HEADWALLS, DIMENSIONS AND APRON GRADES SHALL BE SET BY ENGINEER.
4. FOR MORE THAN ONE PIPE, SET THE PIPES A MINIMUM OF ONE FOOT APART (OUTSIDE BARREL TO OUTSIDE BARREL) ; THERE SHALL BE 12" ABOVE THE TOP OF A PIPE IN A WING-WALL: THE TERMINUS OF THE WINGWALL SHALL BE 2 X DIAMETER FROM THE CENTERLINE OF THE PIPE IN A WINGWALL.
5. THE TERMINUS FOR OUTLET AND INLET APRONS SHALL BE SET BY EXTENDING THE PIPE GRADE AHEAD AND BACK, RESPECTIVELY.
6. FOR ARCH PIPE, THE SPAN SHALL BE SUBSTITUTED FOR D.

CONCRETE HEADWALLS AND APRONS

N.T.S.

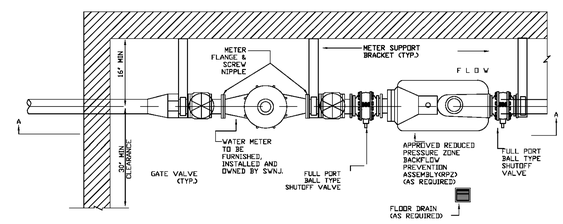

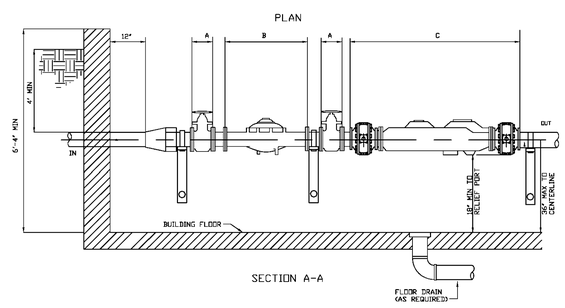

WATER METER ASSEMBLY DETAIL

N.T.S.

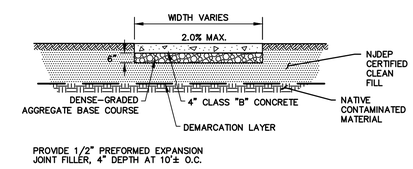

CONCRETE WALKWAY, 4" THICK

N.T.S.

NOTES:

1. ALL CONCRETE SURFACES SHALL BE TREATED WITH A CONCRETE CURING AND SEALING COMPOUND.
2. LAWN RESTORATION, IF APPLICABLE, SHALL INCLUDE NEW TOPSOIL (5" THICK), FERTILIZING AND SEEDING, TYPE A-3 AND STRAW MULCHING. ALL ASSOCIATED COSTS SHALL BE MEASURED AND PAID FOR UNDER THE SEPARATE RESPECTIVE LINE ITEMS IN THE PROJECT.

NO.	DATE	DESCRIPTION	SURVEYED BY	DRAWN BY	DESIGNED BY	CHECKED BY

PLOT BY:SELWYN JOY PLOT DATE:3/11/2022

BOSWELL ENGINEERING
ENGINEERS – SURVEYORS – PLANNERS – SCIENTISTS
330 PHILLIPS AVENUE, SOUTH HACKENSACK, N.J. 07606
TEL: (201) 641-0770 • FAX: (201) 641-1831
N.J. CERTIFICATE OF AUTHORIZATION No. 24GA27958000

STEPHEN T. BOSWELL
PROFESSIONAL ENGINEER N.J. LIC. 34680

JOSEPH A. POMANTE
Digitally signed by Joseph A. Pomante
Date: 2022.03.14 16:22:11 -04'00'
PROFESSIONAL ENGINEER N.J. LIC. 43137

FARM ROAD PARK
BLOCK 203 LOTS 41, 42, & 43
DETAIL SHEET – 3
TOWN OF SECAUCUS
HUDSON COUNTY NEW JERSEY

SURVEYED BY:-- DRAWN BY: S.J. | DESIGNED BY:S.J. CHECKED BY:F.J.R. | SCALE: N.T.S. | JOB NO. SEC-155 | DATE: 3/07/22

CADD FILE: SEC-155-DS.DWG SHEET 12 OF 13

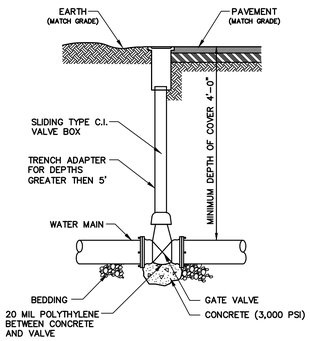

WATER VALVE INSTALLATION

N.T.S.

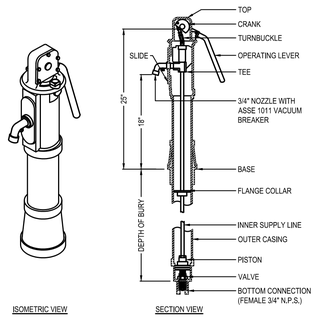

3/4 INCH NON-POLLUTIBLE COMPRESSION HYDRANT (MODEL M-NPL75)
BY MURDOCK MANUFACTURING OR APPROVED EQUAL

WATER SPIGOT DETAIL

N.T.S.

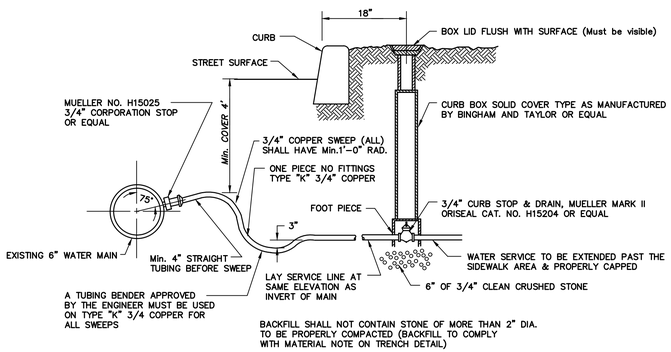

WATER SERVICE CONNECTION (PERFORMED BY OTHERS)

N.T.S.

NO.	DATE	DESCRIPTION	SURVEYED BY	DRAWN BY	DESIGNED BY	CHECKED BY

PLOT BY:SELWYN JOY PLOT DATE:3/11/2022

BOSWELL ENGINEERING
EST. 1924
ENGINEERS – SURVEYORS – PLANNERS – SCIENTISTS
330 PHILLIPS AVENUE, SOUTH HACKENSACK, N.J. 07606
TEL: (201) 641-0770 • FAX: (201) 641-1831
N.J. CERTIFICATE OF AUTHORIZATION No. 24GA27958000

STEPHEN T. BOSWELL
PROFESSIONAL ENGINEER N.J. LIC. 34680

JOSEPH A. POMANTE
Digitally signed by Joseph A. Pomante
Date: 2022.03.14 16:22:50 -04'00'
PROFESSIONAL ENGINEER N.J. LIC. 43137

FARM ROAD PARK
BLOCK 203 LOTS 41, 42, & 43

DETAIL SHEET – 4

TOWN OF SECAUCUS

HUDSON COUNTY NEW JERSEY

SURVEYED BY: --	DESIGNED BY: S.J.	SCALE:	JOB NO.	DATE:
DRAWN BY: S.J.	CHECKED BY: F.J.R.	N.T.S.	SEC-155	3/07/22

CADD FILE: SEC-155-DS.DWG SHEET 13 OF 13